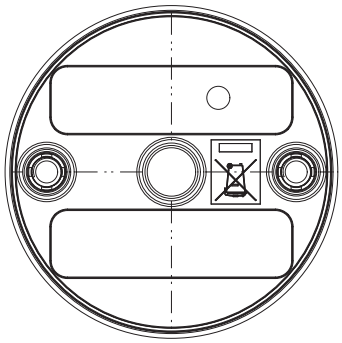

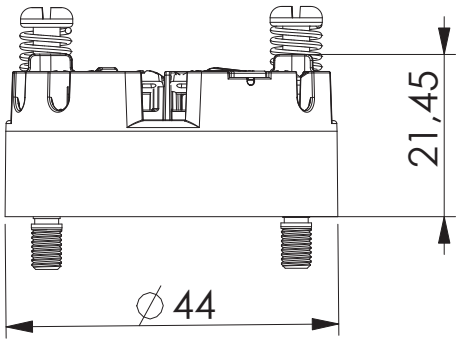

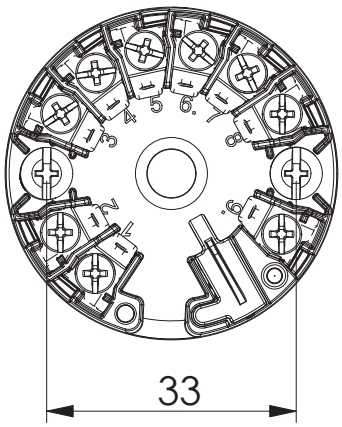

PR electronics

5400

PR Electronics 2018