DK

ADVARSEL
Reparation af modulet må kun foretages af PR electronics A/S.

ADVARSEL
PR Loop Link programmeringsenheden må ikke benyttes til kommunikation med moduler installeret i Ex-område. Enhederne skal installeres i henhold til den tilhørende installations vejledning ved montering i eksplosionfarligt område. System 6300 skal monteres på DIN-skinne efter DIN EN 60715.

SIKKERHEDSREGLER

Modtagelse og udpakning
Udpak modulet uden at beskadige det. Kontrollér ved modtagelsen, at modultypen svarer til den bestilte. Indpakningen bør følge modulet, indtil dette er monteret på blivende plads.

Miljøforhold
Undgå direkte sollys, kraftigt støv eller varme, mekaniske rystelser og stød, og udsæt ikke modulet for regn eller kraftig fugt. Om nødvendigt skal opvarmning, ud over de opgivne grænser for omgivelsestemperatur, forhindres ved hjælp af ventilation.

Installation
Modulet må kun tilsluttes af kvalificerede teknikere, som er bekendte med de tekniske udtryk, advarsler og instruktioner i installationsvejledningen, og som vil følge disse.
Modulet må kun installeres af kvalificerede personer, som er bekendt med national og international lovgivning, direktiver og standarder i det land, hvor modulet skal installeres.
Produktionsår fremgår af de to første cifre i serienummeret.
Hvis der er tvivl om modulets rette håndtering, skal der rettes henvendelse til den lokale forhandler eller alternativt direkte til **PR electronics A/S.**
Installation og tilslutning af modulet skal følge landets gældende regler for installation af elektrisk materiel.
Beskrivelse af indgang / udgang og forsyningsforbindelser findes i produktmanualen, som kan hentes på www.prelectronics.dk.

Kalibrering og justering
Under kalibrering og justering skal måling og tilslutning af eksterne spændinger udføres i henhold til denne installationsvejledning, og teknikeren skal benytte sikkerhedsmæssigt korrekte værktøjer og instrumenter.

Rengøring
Modulet må, i spændingsløs tilstand, rengøres med en klud let fugtet med destilleret vand.

PC-programmering af SYSTEM 6300
Modulet konfigureres til den aktuelle opgave ved hjælp af en PC og PR electronics A/S' kommunikationsinterface Loop Link. Det er muligt at konfigurere modulet både med og uden tilsluttet forsyningsspænding, idet kommunikationsinterfacet leverer nødvendig forsyning til opsætningen. Kommunikationsinterfacet er galvanisk isoleret, så PC'ens port er optimalt beskyttet. Kommunikationen er 2-vejs, så modulets opsætning kan hentes ind i PC'en, og opsætningen i PC'en kan sendes til modulet. For de brugere, der ikke selv vil foretage opsætning, kan modulet leveres konfigureret efter oplyst specifikation: indgangstype, måleområde, følerfejlsdetektering og udgangssignal.

Elektriske specifikationer
Specifikationsområde ..... -40°C til +85°C
Forsyningsspænding, 6333A ..... 8...35 VDC
Forsyningsspænding, 6333B ..... 8...30 VDC
Max. forbrug, 6333A, 1 / 2 kanaler ..... 0,8 W / 1,6 W
Max. forbrug, 6333B, 1 / 2 kanaler ..... 0,7 W / 1,4 W
Internt effekttab, 6333A ..... 0,19...0,8 W
Internt effekttab, 6333B ..... 0,19...0,7 W
Kalibreringstemperatur ..... 20...28°C
Relativ fugtighed ..... < 95% RH (ikke kond.)
Mål ..... 109 x 23,5 x 104 mm
Kapslingsklasse IP20

Indgangstyper:
Pt100 ..... -200°C...+850°C
Ni100 ..... -60°C...+250°C
Lin. R ..... 0 Ω...10000 Ω

Strømudgang:
Signalområde ..... 4...20 mA
Min. signalområde ..... 16 mA
Belastningsmodstand, Ω ..... ≤ ($V_{forsyn.}$-8,0 V)/0,023

Overholdte myndighedskrav:
EMC 2014/30/EU
ATEX 2014/34/EU
RoHS 2011/65/EU
EAC ..... TR-CU 020/2011
EAC Ex ..... TR-CU 012/2011

UK

WARNING
Repair of the device must be done by PR electronics A/S only.

WARNING
Do not use the Loop Link programming interface to program the units in Ex area.
For installation in classified area the devices must be installed according to the appropriate installation drawings. SYSTEM 6300 must be mounted on a DIN rail according to DIN EN 60715.

SAFETY INSTRUCTIONS

Receipt and unpacking
Unpack the device without damaging it. The packing should always follow the device until this has been permanently mounted. Check at the receipt of the device whether the type corresponds to the one ordered.

Environment
Avoid direct sunlight, dust, high temperatures, mechanical vibrations and shock, as well as rain and heavy moisture. If necessary, heating in excess of the stated limits for ambient temperatures should be avoided by way of ventilation.

Mounting
Only qualified technicians who are familiar with the technical terms, warnings, and instructions in this installation guide and who are able to follow these should connect the device.
The device shall only be installed by qualified personnel who are familiar with the national and international laws, directives and standards that apply to this area.
Year of manufacture can be taken from the first two digits in the serial number.
Should there be any doubt as to the correct handling of the device, please contact your local distributor or, alternatively, **PR electronics A/S.**
Mounting and connection of the device should comply with national legislation for mounting of electric materials. Descriptions of input / output and supply connections are shown in the product manual found on www.prelectronics.com.

Calibration and adjustment
During calibration and adjustment, the measuring and connection of external voltages must be carried out according to the specifications of this installation guide. The technician must use tools and instruments that are safe to use.

Cleaning
When disconnected, the device may be cleaned with a cloth moistened with distilled water.

PC programming of SYSTEM 6300
The device is configured to the present task by way of a PC and PR electronics A/S' communications interface Loop Link. The device can be configured with or without a connected supply voltage as the communications interface supplies the necessary voltage to the set-up. The communications interface is galvanically isolated to protect the PC port. Communication is 2-way to allow the retrieval of the device set-up into the PC and to allow the transmission of the PC set-up to the device. For users who do not wish to do the set-up themselves, the device can be delivered configured according to customer specifications: input type, measurement range, sensor error detection, and output signal.

Electrical specifications
Specifications range ..... -40°C to +85°C
Supply voltage, 6333A ..... 8...35 VDC
Supply voltage, 6333B ..... 8...30 VDC
Max. required power, 6333A, 1 / 2 channels ..... 0.8 W / 1.6 W
Max. required power, 6333B, 1 / 2 channels ..... 0.7 W / 1.4 W
Internal power dissipation, 6333A ..... 0.19...0.8 W
Internal power dissipation, 6333B ..... 0.19...0.7 W
Calibration temperature ..... 20...28°C
Relative humidity ..... < 95% RH (non-cond.)
Dimensions ..... 109 x 23.5 x 104 mm
Protection degree IP20

Input types:
Pt100 ..... -200°C...+850°C
Ni100 ..... -60°C...+250°C
Lin. R ..... 0 Ω...10000 Ω

Current output:
Signal range ..... 4...20 mA
Min. signal range ..... 16 mA
Load resistance, Ω ..... ≤ (V_{supply}-8.0 V)/0.023

Observed authority requirements:
EMC 2014/30/EU
ATEX 2014/34/EU
RoHS 2011/65/EU
EAC ..... TR-CU 020/2011
EAC Ex ..... TR-CU 012/2011

FR

AVERTISSEMENT
Seule PR electronics SARL est autorisée à réparer le module.

AVERTISSEMENT
Ne pas utiliser le kit de programmation "Loop Link" en zone classée dangereuse Ex.
Pour des installations en zone classée, les modules doivent être monté conformément aux plans appropriés.
Il convient de monter l'appareil SYSTEME 6300 sur un rail DIN en se conformant à la norme DIN EN 60715.

CONSIGNES DE SECURITE

Réception et déballage
Déballez le module sans l'endommager. Il est recommandé de conserver l'emballage du module tant que ce dernier n'est pas définitivement monté. A la réception du module, vérifiez que le type de module reçu correspond à celui que vous avez commandé.

Environnement
N'exposez pas votre module aux rayons directs du soleil et choisissez un endroit à humidité modérée et à l'abri de la poussière, des températures élevées, des chocs et des vibrations mécaniques et de la pluie. Le cas échéant, des systèmes de ventilation permettent d'éviter qu'une pièce soit chauffée au-delà des limites prescrites pour les températures ambiantes.

Montage
Il est conseillé de réserver le raccordement du module aux techniciens qualifiés qui connaissent les termes techniques, les avertissements et les instructions de ce guide et qui sont capables d'appliquer ces dernières.
Le module sera seulement installé par un personnel qualifié qui est informé des lois, des directives et des normes nationales et internationales qui s'appliquent à ce secteur.
L'année de la fabrication est indiquée dans les deux premiers chiffres dans le numéro de série.
Si vous avez un doute quelconque quant à la manipulation du module, veuillez contacter votre distributeur local. Vous pouvez également vous adresser à **PR electronics SARL.**
Le montage et le raccordement du module doivent être conformes à la législation nationale en vigueur pour le montage de matériaux électriques. Les connexions des alimentations et des entrées / sorties sont décrites dans le manuel du produit sur www.prelectronics.fr.

Etalonnage et réglage
Lors des opérations d'étalonnage et de réglage, il convient d'effectuer les mesures et les connexions des tensions externes en respectant les spécifications mentionnées dans ce guide. Les techniciens doivent utiliser d es outils et des instruments pouvant être manipulés en toute sécurité.

Maintenance et entretien
Une fois le module hors tension, prenez un chiffon imbibé d'eau distillée pour le nett oyer.

Programmation par PC du Système 6300
Le module peut être programmé en fonction d'une application donnée à partir d'un PC et le kit de programmation Loop Link de PR electronics A/S. Le module peut être programmé sans être alimenté car l'interface de communication fournit l'alimentation nécessaire pour la configuration. L'interface de communication est doté d'une isolation galvanique pour protéger le port du PC. La communication est bidirectionnelle. Cela permet non seulement la programmation du module mais également la récupération d'une configuration existante ainsi que la lecture du numéro de série et du repère. Le module peut être livré déjà programmé, si l'utilisateur le souhaite.

Spécifications
Plage de température ..... -40°C à +85°C
Tension d'alimentation, 6333A ..... 8...35 Vcc
Tension d'alimentation, 6333B ..... 8...30 Vcc
Puissance maximale requise, 6333A, 1 / 2 voies ..... 0,8 W / 1,6 W
Puissance maximale requise, 6333B, 1 / 2 voies ..... 0,7 W / 1,4 W
Puissance dissipée, 6333A ..... 0,19...0,8 W
Puissance dissipée, 6333B ..... 0,19...0,7 W
Température d'étalonnage ..... 20...28°C
Humidité relative ..... < 95% HR (sans cond.)
Dimensions ..... 109 x 23,5 x 104 mm
Degré de protection IP20

Types d'entrée :
Pt100 ..... -200°C...+850°C
Ni100 ..... -60°C...+250°C
Résistance linéaire ..... 0 Ω...10000 Ω

Sortie courant :
Gamme de signal ..... 4...20 mA
Plage de signal min ..... 16 mA
Résistance de charge, Ω ..... ≤ ($V_{alim.}$-8,0 V)/0,023

Compatibilité avec les normes:
CEM 2014/30/UE
ATEX 2014/34/UE
RoHS 2011/65/UE
EAC ..... TR-CU 020/2011
EAC Ex ..... TR-CU 012/2011

DE

WARNUNG
Reparaturen des Gerätes dürfen nur von PR electronics A/S vorgenommen werden.

WARNUNG
Benutzen Sie die Programmierschnittstelle Loop Link nicht im Ex Bereich.
Zur Montage in klassifizierten Zonen müssen die Geräte nach den dazugehörigen Einbauzeichnungen installiert werden. Das System 6300 muss auf eine DIN-Schiene nach DIN EN 60715 montiert werden.

SICHERHEITSREGELN

Empfang und Auspacken
Packen Sie das Gerät aus, ohne es zu beschädigen, und kontrollieren Sie beim Empfang, ob der Gerätetyp Ihrer Bestellung entspricht. Die Verpackung sollte beim Gerät bleiben, bis dieses am endgültigen Platz montiert ist.

Umgebungsbedingungen
Direkte Sonneneinstrahlung, starke Staubentwicklung oder Hitze, mechanische Erschütterungen und Stöße sind zu vermeiden; das Gerät darf nicht Regen oder starker Feuchtigkeit ausgesetzt werden. Bei Bedarf muss eine Erwärmung, welche die angegebenen Grenzen für die Umgebungstemperatur überschreitet, mit Hilfe eines Kühlgebläses verhindert werden.

Installation
Das Gerät darf nur von qualifizierten Technikern angeschlossen werden, die mit den technischen Ausdrücken, Warnungen und Anweisungen in dieser Installationsanleitung vertraut sind und diese befolgen.
Das Gerät darf nur von qualifiziertem Personal eingebaut werden, das mit den nationalen und internationalen Gesetzen, Richtlinien und Standards auf diesem Gebiet vertraut ist.
Das Baujahr kann aus den ersten beiden Ziffern der Seriennummer ersehen werden.
Sollten Zweifel bezüglich der richtigen Handhabung des Gerätes bestehen, sollte man mit dem Händler vor Ort Kontakt aufnehmen. Sie können aber auch direkt mit **PR electronics GmbH** Kontakt aufnehmen.
Die Installation und der Anschluss des Gerätes haben in Übereinstimmung mit den geltenden Regeln des jeweiligen Landes bez. der Installation elektrischer Apparaturen zu erfolgen.
Eine Beschreibung von Eingangs- / Ausgangs- und Versorgungsanschlüssen befindet sich im Produkthandbuch, das unter www.prelectronics.de gefunden und abgerufen werden kann.

Kalibrierung und Justierung
Während der Kalibrierung und Justierung sind die Messung und der Anschluss externer Spannungen entsprechend dieser Installationsanleitung auszuführen, und der Techniker muss hierbei sicherheitsmäßig einwandfreie Werkzeuge und Instrumente benutzen.

Reinigung
Das Gerät darf in spannungslosem Zustand mit einem Lappen gereinigt werden, der mit destilliertem Wasser leicht angefeuchtet ist.

PC-Programmierung des Systems 6300
Das Gerät wird für die jeweilige Aufgabe mit Hilfe eines PCs und PR electronics A/S Kommunikationsschnittstelle Loop Link konfiguriert. Es ist möglich, das Gerät sowohl mit als auch ohne angeschlossene Versorgungsspannung zu konfigurieren, da die Kommunikationsschnittstelle die notwendige Versorgung für die Einstellung liefert. Die Kommunikationsschnittstelle ist galvanisch isoliert, sodass der Anschluss des PCs optimal geschützt ist. Die Kommunikation erfolgt in beiden Richtungen, sodass die Einstellung des Gerätes in den PC geholt, und die Einstellung im PC an das Gerät gesandt werden kann. Für diejenigen Anwender, welche die Einstellung nicht selbst vornehmen wollen, kann das Gerät nach folgenden Kundenspezifikationen konfiguriert geliefert werden: Eingangstyp, Messbereich, Fühlerfehlererkennung und Ausgangssignal.

Elektrische Daten
Spezifikationsbereich ..... -40°C bis +85°C
Versorgungsspannung, 6333A ..... 8...35 VDC
Versorgungsspannung, 6333B ..... 8...30 VDC
Leistungsbedarf, 6333A, 1 / 2 Kanäle ..... 0,8 W / 1,6 W
Leistungsbedarf, 6333B, 1 / 2 Kanäle ..... 0,7 W / 1,4 W
Verlustleistung, 6333A ..... 0,19...0,8 W
Verlustleistung, 6333B ..... 0,19...0,7 W
Kalibrierungstemperatur ..... 20...28°C
Luftfeutigkeit ..... < 95% RF (nicht kond.)
Maß ..... 109 x 23,5 x 104 mm
Schutzart IP20

Eingangs-Typen:
Pt100 ..... -200°C...+850°C
Ni100 ..... -60°C...+250°C
Lin. R ..... 0 Ω...10000 Ω

Stromausgang:
Signalbereich ..... 4...20 mA
Min. Signalbereich ..... 16 mA
Belastungswiderstand, Ω ..... ≤ ($V_{Vers.}$-8,0 V)/0,023

Eingehaltene Behördenvorschriften:
EMV 2014/30/EU
ATEX 2014/34/EU
RoHS 2011/65/EU
EAC ..... TR-CU 020/2011
EAC Ex ..... TR-CU 012/2011

SN6333-110-2605

6333A & 6333B

6333A 6333B

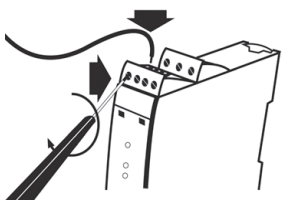

DK Ledningskvadrat (min....max.) 0,13...2,08 mm² / AWG 26...14 flerkoret ledning. Klemskruetilspændingsmoment 0,5 Nm.

UK Wire size (min....max.) 0.13...2.08 mm² / AWG 26...14 stranded wire. Screw terminal torque 0.5 Nm.

FR Taille des fils (min....max.) 0,13...2,08 mm² / AWG 26...14 fils multibrins. Pression max. avant déformation de la vis 0,5 Nm.

DE Leitungsquerschnitt (min....max.) 0,13...2,08 mm² / AWG 26...14 Litzendraht. Klemmschraubenanzugsmoment 0,5 Nm.

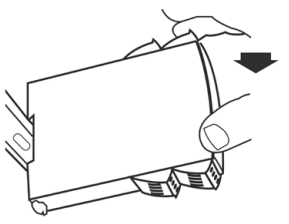

DK Montering på DIN-skinne.
UK Mounting on DIN rail.
FR Montage sur rail DIN.
DE Montage auf DIN-Schiene.

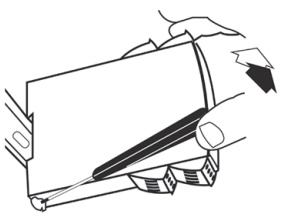

DK Frigørelse fra DIN-skinne
Husk først at demontere tilslutningsklemmerne med farlig spænding. Modulet frigøres fra DIN-skinnen ved at løfte i den nederste lås.

UK Demounting from DIN rail
First, remember to demount the connectors with hazardous voltages. Detach the device from the DIN rail by lifting the bottom lock.

FR Démontage du rail DIN
Tout d'abord, n'oubliez pas de démonter les connecteurs où règnent des tensions dangereuses. Débloquez le verrou inférieur pour dégager le module du rail DIN.

DE Lösen von DIN-Schiene
Zunächst ist gefährliche Spannung von den Anschlussklemmen zu trennen. Das Gerät wird von der DIN-Schiene gelöst, indem man den unteren Verschluss löst.

DK Kina RoHS UK China RoHS FR RoHS chinois DE China-RoHS

Part Name	Hazardous Substances					
	Lead (Pb)	Mercury (Hg)	Cadmium (Cd)	Hexavalent Chromium (Cr (VI))	Polybrominated biphenyls (PBB)	Polybrominated diphenyl ethers (PBDE)
Printed circuit board	X	O	O	O	O	O

This table is prepared in accordance with the provisions of SJ/T 11364
O: Indicates that said hazardous substance contained in all of the homogeneous materials for this part is below the limit requirement of GB/T 26572.
X: Indicates that said hazardous substance contained in at least one of the homogeneous materials used for this part is above the limit requirement of GB/T 26572.

The product's Environmentally Friendly Use Period (EFUP) is 50 years

DK Ex-godkendelser UK I.S approvals FR Approbations S.I. DE Ex-Zulassungen

	ATEX	Area	Installation drawing	IECEx	Area	Installation drawing	FM	Area	Installation drawing	CSA	Area	Installation drawing	INMETRO	Area	Installation drawing	EAC Ex
6333A	DEKRA 20ATEX0106 X	2, 22	6333QA02	DEK 20.0062X	2, 22	6333QI02	FM17US0013X	2 / Div 2	6331QF01	1125003	2 / Div 2	6333QC02	DEKRA 23.0010 X	2, 22	6333QB02	EAEU KZ 7500361.01.01.08756
6333B	DEKRA 20ATEX0105 X	0, 1, 2, 21, 22, M1	6333QA01	DEK 20.0062X	0, 1, 2, 21, 22, M1	6333QI01	FM17US0013X	0, 1, 2 / Div 1	6331QF01	1125003	0 , 1, 2 / Div 1	6333QC01	DEKRA 23.0010 X	0, 1, 2, 21, 22, M1	6333QB01	EAEU KZ 7500361.01.01.08756

	DK	UK	FR	DE
A	Indgangssignaler	Input signals	Signaux d'entrée	Eingangssignale
B	Udgangssignaler	Output signals	Signaux de sortie	Ausgangssignale
C	RTD, 3-leder	RTD, 3-wire	RTD, 3-fils	WTH, 3-Leiter
D	RTD, 2-leder	RTD, 2-wire	RTD, 2-fils	WTH, 2-Leiter
F	Modstand, 3-leder	Resistance, 3-wire	Résistance, 3-fils	Widerstand, 3-Leiter
F	Modstand, 2-leder	Resistance, 2-wire	Résistance, 2-fils	Widerstand, 2-Leiter
G	6333A Forsyning + 8,0...35 VDC	6333A Supply + 8.0...35 VDC	6333A Alimentation + 8,0...35 Vcc	6333A Versorgung + 8,0...35 VDC
H	6333B Forsyning + 8,0...30 VDC	6333B Supply + 8.0...30 VDC	6333B Alimentation + 8,0...30 Vcc	6333B Versorgung + 8,0...30 VDC
I	4...20 mA udgang	4...20 mA output	Sortie 4...20 mA	4...20 mA-Ausgang
Ch.1	Kanal 1	Channel 1	Voie 1	Kanal 1
Ch.2	Kanal 2	Channel 2	Voie 2	Kanal 2

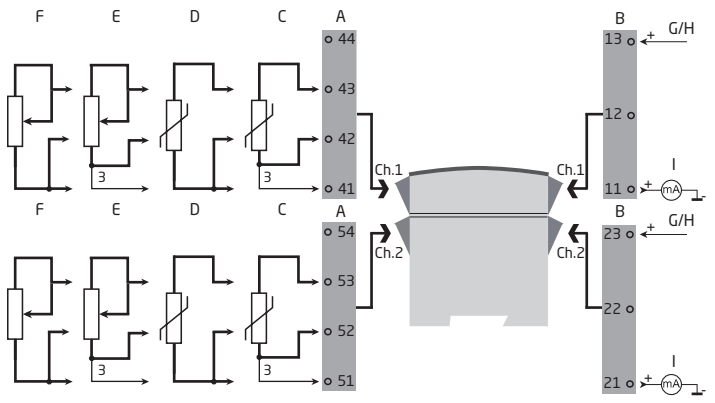

DK Sideskilt UK Side label FR Etiquette DE Typenschild

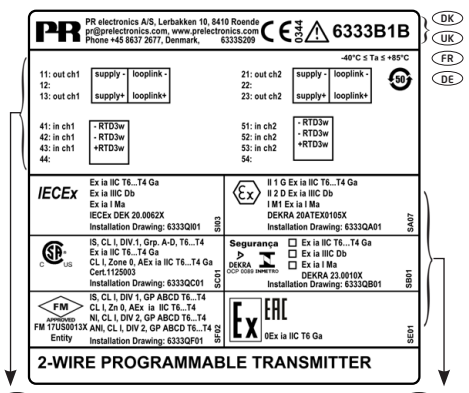

DK Typenr.
UK Type no.
FR No. de type.
DE Typennr.

DK Benforbindelser.
UK Pin connections.
FR Raccordement des bornes.
DE Klemmen-anschluss.

DK Godkendelser.
UK Approvals.
FR Homologations.
DE Zulassungen.

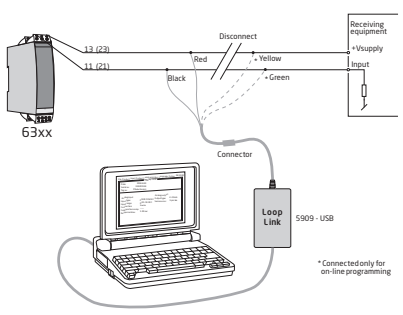

DK Loop Link er et kommunikationsinterface, der er nødvendigt for programmering af 63xx. Loop Link må ikke benyttes til kommunikation med moduler installeret i Ex-område.

UK Loop Link is a communications interface that is needed for programming 63xx. Loop Link is not approved for communication with devices installed in hazardous (Ex) areas.

FR Loop Link est un kit de programmation permettant de programmer les 63xx. Loop Link ne doit pas être utilisé pour communication avec des modules installés en zone dangereuse.

DE Loop Link ist eine Schnittstelle zur Programmierung des 63xx. Loop Link darf nicht zur kommunikation mit Geräten, die in Ex-gefährdeten Bereichen installiert sind, benutz werden.

DK Dokumentation, godkendelser og yderligere information findes på internettet på **www.prelectronics.dk**

UK Documentation, permits and other information can be found on the internet at **www.prelectronics.com**

FR La documentation et toute autre information peuvent être trouvées sur l'Internet sur notre site: **www.prelectronics.fr**

DE Dokumentationen, Zulassungen und andere Informationen können auf unserer Internet-Seite unter **www.prelectronics.de** gefunden und abgerufen werden.

BR Documentações, licenças e outras informações podem ser encontradas no site **www.prelectronics.com**

ATEX-installation drawing 6333QA01-V3R0

For safe installation of 6333Bxx the following must be observed. The module shall only be installed by qualified personnel who are familiar with the national and international laws, directives and standards that apply to this area. Year of manufacture can be taken from the first two digits in the serial number.

ATEX Certificate DEKRA 20ATEX 0105X

Marking
II 1 G Ex ia IIC T6...T4 Ga
II 2 D Ex ia IIIC Db
I M1 Ex ia I Ma

Standards EN IEC 60079-0: 2018, EN 60079-11: 2012

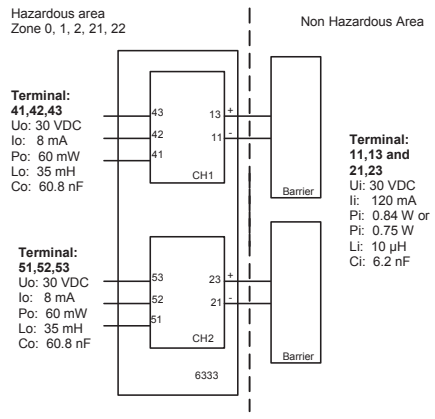

Temperature Class	Ambient temperature range	
	Pi: 0.84 W	Pi: 0.75 W
T6	-40°C to +40°C	-40°C to +45°C
T5	-40°C to +55°C	-40°C to +60°C
T4	-40°C to +85°C	-40°C to +85°C

Installation notes

If the enclosure is made of non-metallic plastic materials, electrostatic charges on the transmitter enclosure shall be avoided.

If the transmitter is installed in an explosive atmosphere requiring the use of equipment protection level Ga, the transmitter shall be mounted in an enclosure that provides a degree of protection of at least IP20 according to EN 60529, and that is suitable for the application and correctly installed.

If the transmitter is installed in an explosive atmosphere requiring the use of equipment protection level Ga or Ma, and if the enclosure is made of aluminum, it must be installed such, that ignition sources due to impact and friction sparks are excluded.

If the transmitter is installed in an explosive atmosphere requiring the use of equipment protection level Db, the transmitter shall be mounted in a separately certified enclosure that provides a degree of protection of at least IP5X according to EN 60079-0, and that is suitable for the application and correctly installed.

If the transmitter is installed in an explosive atmosphere requiring the use of equipment protection level Ma, the transmitter shall be mounted in an enclosure that provides a degree of protection of at least IP54 according to EN 60529, and that is suitable for the application and correctly installed.

Cable entries and blanking elements shall be used that are suitable for the application and correctly installed.

For an ambient temperature ≥ 60ºC, heat resistant cables shall be used with a rating of at least 20 K above the ambient temperature.

ATEX-installation drawing 6333QA02-V3R0

For safe installation of 6333A the following must be observed. The module shall only be installed by qualified personnel who are familiar with the national and international laws, directives and standards that apply to this area. Year of manufacture can be taken from the first two digits in the serial number.

Certificate DEKRA 20ATEX0106 X

Marking
II 3 G Ex nA [ic] IIC T6 … T4 Gc
II 3 G Ex ec [ic] IIC T6 … T4 Gc
II 3 G Ex ic IIC T6 … T4 Gc
II 3 D Ex ic IIIC Dc

Standards EN 60079-0: 2018, EN 60079-11: 2012,
EN 60079-15: 2010, EN 60079-7:2015+A1: 2018

Terminal 41,42,43 51,52,53	Terminal 11,12,13 21,22,23	Terminal 11,12,13 21,22,23	Terminal 11,12,13 21,22,23
Ex ic IIC,Ex ic IIIC	Ex ic IIC,Ex ic IIIC	Ex ic IIC,Ex ic IIIC	Ex nA, Ex ec
Uo: 5 V Io: 4 mA Po: 20 mW Lo: 900 mH Co: 1000 µF	Ui = 35 V Ii = 110 mA Ci = 6.2 nF Li = 10 µH	Ui = 24 V Ii = 260 mA Ci = 6.2 nF Li = 10 µH	Umax ≤ 35 VDC or Umax ≤ 24 VDC

Ex ic IIC, Ex ic IIIC Temperature Class	Ambient temperature range	
	Ui=35 V	Ui=24 V
T6	-40°C to +54°C	-40°C to +63°C
T5	-40°C to +69°C	-40°C to +78°C
T4	-40°C to +85°C	-40°C to +85°C

Ex ec, Ex nA Temperature Class	Ambient temperature range	
	Vmax=35 V	Vmax=24 V
T6	-40°C to +43°C	-40°C to +55°C
T5	-40°C to +85°C	-40°C to +85°C
T4	-40°C to +85°C	-40°C to +85°C

Installation notes

If the enclosure is made of non-metallic plastic materials, electrostatic charges on the transmitter enclosure shall be avoided.

If the transmitter is installed in an explosive atmosphere requiring the use of equipment protection level Gc and applied in type of protection Ex ic, the transmitter shall be mounted in an enclosure that provides a degree of protection of at least IP20 according to EN 60529, and that is suitable for the application and correctly installed.

If the transmitter is installed in an explosive atmosphere requiring the use of equipment protection level Dc, the transmitter shall be mounted in a separately certified enclosure that provides a degree of protection of at least IP5X according to EN 60079-0, and that is suitable for the application and correctly installed. The surface temperature of the outer enclosure is +20 K above the ambient temperature, determined without a dust layer.
Ambient temperature range: -40°C to +85°C.

If the transmitter is installed in an explosive atmosphere requiring the use of equipment protection level Gc and applied in type of protection Ex nA or Ex ec, the transmitter shall be mounted in a separately certified enclosure that provides a degree of protection of at least IP54 according to EN 60079-0, and that is suitable for the application and correctly installed.

If the transmitter is installed in an explosive atmosphere requiring the use of equipment protection level Gc and applied in type of protection Ex nA or Ex ec, the equipment shall only be used in an area of not more than pollution degree 2, as defined in EN 60664-1.

IECEx-installation drawing 6333QI01-V2R0

For safe installation of 6333Bxx the following must be observed. The module shall only be installed by qualified personnel who are familiar with the national and international laws, directives and standards that apply to this area. Year of manufacture can be taken from the first two digits in the serial number.

Certificate IECEx DEK 20.0062X

Marking
Ex ia IIC T6...T4 Ga
Ex ia IIIC Db
Ex ia I Ma

Standards IEC 60079-0: 2017, IEC 60079-11: 2011

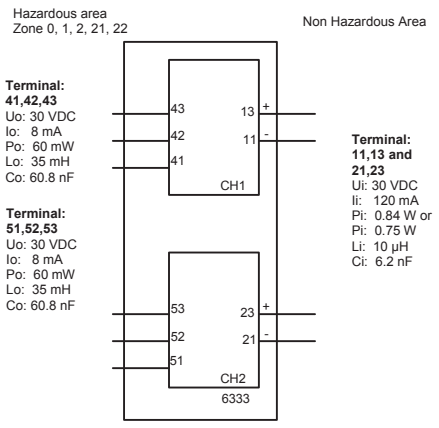

Temperature Class	Ambient temperature range	
	Pi: 0.84 W	Pi: 0.75 W
T6	-40°C to +40°C	-40°C to +45°C
T5	-40°C to +55°C	-40°C to +60°C
T4	-40°C to +85°C	-40°C to +85°C

Installation notes

If the enclosure is made of non-metallic plastic materials, electrostatic charges on the transmitter enclosure shall be avoided.

If the transmitter is installed in an explosive atmosphere requiring the use of equipment protection level Ga, the transmitter shall be mounted in an enclosure that provides a degree of protection of at least IP20 according to IEC 60529, and that is suitable for the application and correctly installed.

If the transmitter is installed in an explosive atmosphere requiring the use of equipment protection level Ga or Ma, and if the enclosure is made of aluminum, it must be installed such, that ignition sources due to impact and friction sparks are excluded.

If the transmitter is installed in an explosive atmosphere requiring the use of equipment protection level Db, the transmitter shall be mounted in a separately certified enclosure that provides a degree of protection of at least IP5X according to IEC 60079-0, and that is suitable for the application and correctly installed. The surface temperature of the outer enclosure is +20 K above the ambient temperature, determined without a dust layer.
Ambient temperature range: -40°C to +85°C.

If the transmitter is installed in an explosive atmosphere requiring the use of equipment protection level Ma, the transmitter shall be mounted in an enclosure that provides a degree of protection of at least IP54 according to IEC 60529, and that is suitable for the application and correctly installed.
Ambient temperature range: -40°C to +85°C.

Cable entries and blanking elements shall be used that are suitable for the application and correctly installed.

For an ambient temperature ≥ 60ºC, heat resistant cables shall be used with a rating of at least 20 K above the ambient temperature.

IECEx-installation drawing 6333QI02-V2R0

For safe installation of 6333A the following must be observed. The module shall only be installed by qualified personnel who are familiar with the national and international laws, directives and standards that apply to this area. Year of manufacture can be taken from the first two digits in the serial number.

Certificate IECEx DEK 20.0062X

Marking
Ex nA [ic] IIC T6 … T4 Gc
Ex ec [ic] IIC T6 … T4 Gc
Ex ic IIC T6 … T4 Gc
Ex ic IIIC Dc

Standards IEC 60079-0: 2017, IEC 60079-11: 2011,
IEC 60079-15: 2010, IEC 60079-7: 2017

Terminal 41,42,43 51,52,53	Terminal 11,12,13 21,22,23	Terminal 11,12,13 21,22,23	Terminal 11,12,13 21,22,23
Ex ic IIC,Ex ic IIIC	Ex ic IIC,Ex ic IIIC	Ex ic IIC,Ex ic IIIC	Ex nA, Ex ec
Uo: 5 V Io: 4 mA Po: 20 mW Lo: 900 mH Co: 1000 µF	Ui = 35 V Ii = 110 mA Ci = 6.2 nF Li = 10 µH	Ui = 24 V Ii = 260 mA Ci = 6.2 nF Li = 10 µH	Umax ≤ 35 VDC or Umax ≤ 24 VDC

Ex ic IIC, Ex ic IIIC Temperature Class	Ambient temperature range	
	Ui=35 V	Ui=24 V
T6	-40°C to +54°C	-40°C to +63°C
T5	-40°C to +69°C	-40°C to +78°C
T4	-40°C to +85°C	-40°C to +85°C

Ex ec, Ex nA Temperature Class	Ambient temperature range	
	Vmax=35 V	Vmax=24 V
T6	-40°C to +43°C	-40°C to +55°C
T5	-40°C to +85°C	-40°C to +85°C
T4	-40°C to +85°C	-40°C to +85°C

Installation notes

If the enclosure is made of non-metallic plastic materials, electrostatic charges on the transmitter enclosure shall be avoided.

If the transmitter is installed in an explosive atmosphere requiring the use of equipment protection level Gc and applied in type of protection Ex ic, the transmitter shall be mounted in an enclosure that provides a degree of protection of at least IP20 according to IEC 60529, and that is suitable for the application and correctly installed.

If the transmitter is installed in an explosive atmosphere requiring the use of equipment protection level Dc, the transmitter shall be mounted in a separately certified enclosure that provides a degree of protection of at least IP5X according to IEC 60079-0, and that is suitable for the application and correctly installed. The surface temperature of the outer enclosure is +20 K above the ambient temperature, determined without a dust layer.
Ambient temperature range: -40°C to +85°C.

If the transmitter is installed in an explosive atmosphere requiring the use of equipment protection level Gc and applied in type of protection Ex nA or Ex ec, the transmitter shall be mounted in a separately certified enclosure that provides a degree of protection of at least IP54 according to IEC 60079-0, and that is suitable for the application and correctly installed.

If the transmitter is installed in an explosive atmosphere requiring the use of equipment protection level Gc and applied in type of protection Ex nA or Ex ec, the equipment shall only be used in an area of not more than pollution degree 2, as defined in IEC 60664-1.

Desenho de Instalação INMETRO 6333QB01-V1R0

Para instalação segura do 6333B.. o seguinte deve ser observado. O modelo deve apenas ser instalado por pessoas qualificadas que são familiarizadas com as leis nacionais e internacionais, diretrizes e padrões que se aplicam a esta área.
O ano de fabricação pode ser pego dos dois primeiros dígitos do número de série.

Certificado DEKRA 23.0010 X

Marcas Ex ia IIC T6...T4 Ga
Ex ia IIIC Db
Ex ia I Ma

Normas **ABNT NBR IEC 60079-0:2020 Versão Corrigida:2023**
ABNT NBR IEC 60079-11:2013 Versão Corrigida:2017

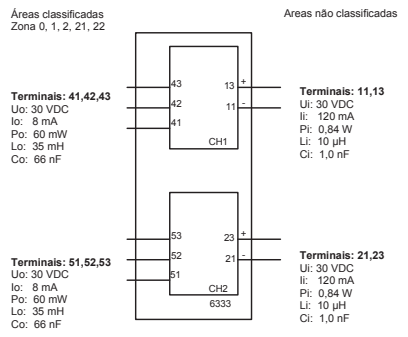

Classe de temperatura	Faixa de temperatura ambienta	
	Pi: 0,84 W	Pi: 0,75 W
T6	-40 °C to +40 °C	-40 °C to +45 °C
T5	-40 °C to +55 °C	-40 °C to +60 °C
T4	-40 °C to +85 °C	-40 °C to +85 °C

Notas de Instalação.

Se o invólucro for feito de materiais plásticos não metálicos, devem ser evitadas cargas eletrostáticas no invólucro do transmissor.

Se o transmissor for instalado em uma atmosfera explosiva que exija o uso de nível de proteção de equipamento Ga, o transmissor deverá ser montado em um invólucro que forneça um grau de proteção de pelo menos IP20 de acordo com a ABNT NBR IEC 60529, e que seja adequado para a aplicação e corretamente instalado.

Se o transmissor for instalado em uma atmosfera explosiva que exija o uso de equipamento de nível de proteção Ga ou Ma, e se o invólucro for feito de alumínio, ele deverá ser instalado de forma que fontes de ignição devido a faíscas de impacto e fricção sejam excluídas.

Se o transmissor for instalado em uma atmosfera explosiva que exija o uso de nível de proteção de equipamento Db, o transmissor deverá ser montado em um invólucro certificado separadamente que forneça um grau de proteção de pelo menos IP5X de acordo com a ABNT NBR IEC 60079-0, e que seja adequado para o aplicativo e instalado corretamente. A temperatura da superfície do invólucro externo é +20 K acima da temperatura ambiente, determinada sem camada de poeira. Faixa de temperatura ambiente: -40 °C a +85 °C

Se o transmissor for instalado em uma atmosfera explosiva que exija o uso de nível de proteção de equipamento Ma, o transmissor deverá ser montado em um invólucro que forneça um grau de proteção de pelo menos IP54 de acordo com a ABNT NBR IEC 60529, e que seja adequado para a aplicação e corretamente instalado. Faixa de temperatura ambiente: -40 °C a +85 °C

Devem ser utilizadas entradas de cabos e elementos de obturação adequados à aplicação e instalados corretamente.

Para uma temperatura ambiente ≥ 60ºC, devem ser utilizados cabos resistentes ao calor com uma classificação de pelo menos 20 K acima da temperatura ambiente.

Desenho de Instalação INMETRO 6333QB02-V1R0

Para instalação segura do 6333A.. o seguinte deve ser observado. O modelo deve apenas ser instalado por pessoas qualificadas que são familiarizadas com as leis nacionais e internacionais, diretrizes e padrões que se aplicam a esta área.
O ano de fabricação pode ser pego dos dois primeiros dígitos do número de série.

Certificado DEKRA 23.0010 X

Marcas Ex ec [ic] IIC T6..T4 Gc
Ex ic IIC T6..T4 Gc
Ex ic IIIC Dc

Normas **ABNT NBR IEC 60079-0:2020 Versão Corrigida:2023**
ABNT NBR IEC 60079-7:2018 Versão Corrigida:2022
ABNT NBR IEC 60079-11:2013 Versão Corrigida:2017

Terminais 41,42,43 51,52,53	Terminais 11,12,13 21,22,23	Terminais 11,12,13 21,22,23	Terminais 11,12,13 21,22,23
Ex ic IIC,Ex ic IIIC	Ex ic IIC,Ex ic IIIC	Ex ic IIC,Ex ic IIIC	Ex ec
Uo: 5 V Io: 4 mA Po: 20 mW Lo: 900 mH Co: 1000 µF	Ui = 35 V Ii = 110 mA Ci = 1 nF Li = 10 µH	Ui = 24 V Ii = 260 mA Ci = 1 nF Li = 10 µH	Umax ≤ 35 Vdc or Umax ≤ 24 Vdc

Ex ic IIC, Ex ic IIIC Classe de temperatura	Faixa de temperatura ambienta	
	Ui=35V	Ui=24V
T6	-40 °C to +54 °C	-40 °C to +63 °C
T5	-40 °C to +69 °C	-40 °C to +78 °C
T4	-40 °C to +85 °C	-40 °C to +85 °C

Ex ec Classe de temperatura	Faixa de temperatura ambienta	
	Umax=35V	Umax=24V
T6	-40 °C to +43 °C	-40 °C to +55 °C
T5	-40 °C to +85 °C	-40 °C to +85 °C
T4	-40 °C to +85 °C	-40 °C to +85 °C

Notas para instalação

Se o invólucro for feito de materiais plásticos não metálicos, devem ser evitadas cargas eletrostáticas no invólucro do transmissor.

Se o transmissor for instalado em uma atmosfera explosiva que exija o uso de nível de proteção de equipamento Gc e aplicado no tipo de proteção Ex ic, o transmissor deverá ser montado em um gabinete que forneça um grau de proteção de pelo menos IP20 de acordo com ABNT NBR IEC 60529, e adequado à aplicação e instalado corretamente.

Se o transmissor for instalado em uma atmosfera explosiva que exija o uso de nível de proteção de equipamento Dc, o transmissor deverá ser montado em um invólucro certificado separadamente que forneça um grau de proteção de pelo menos IP5X de acordo com a ABNT NBR IEC 60079-0, e que seja adequado para o aplicativo e instalado corretamente. A temperatura da superfície do invólucro externo é +20 K acima da temperatura ambiente, determinada sem camada de poeira.
Faixa de temperatura ambiente: -40°C a +85°C.

Se o transmissor for instalado em uma atmosfera explosiva que exija o uso de nível de proteção de equipamento Gc e aplicado no tipo de proteção Ex ec, o transmissor deverá ser montado em um invólucro certificado separadamente que forneça um grau de proteção de pelo menos IP54 de acordo com conforme ABNT NBR IEC 60079-0, e que seja adequado à aplicação e instalado corretamente.

Se o transmissor for instalado em uma atmosfera explosiva que exija o uso de nível de proteção de equipamento Gc e aplicado no tipo de proteção Ex ec, o equipamento deverá ser usado somente em uma área com grau de poluição não superior a 2, conforme definido na IEC 60664-1.

CSA Installation drawing 6333QC01-V1R0

Hazardous (Classified) Location
IS,Class I, Division 1, Group A,B,C,D T4..T6
Ex ia IIC T4..T6 Ga
Class I, Zone 0, AEx ia IIC T4..T6 Ga

Non Hazardous Location

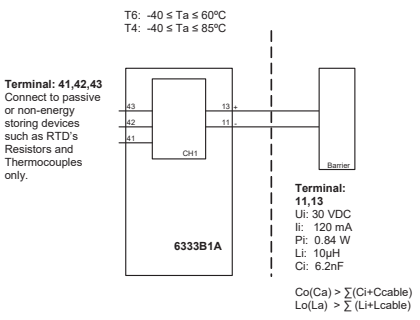

Installation notes

The Transmitter must be installed in a suitable enclosure to meet installation codes stipulated in The Canadian Electrical Code (CEC).

Substitution of components may impair intrinsic safety.

Hazardous (Classified) Location
IS,Class I, Division 1, Group A,B,C,D T4..T6
Ex ia IIC T4..T6 Ga
Class I, Zone 0, AEx ia IIC T4..T6 Ga

Non Hazardous Location

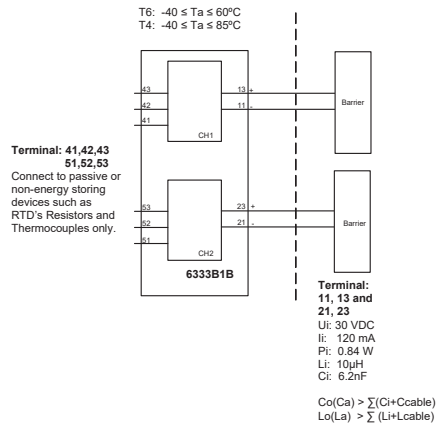

Installation notes
The Transmitter must be installed in a suitable enclosure to meet installation codes stipulated in The Canadian Electrical Code (CEC).

Channel 1 and Channel 2 are separate channels and therefore separate shielded cables shall be used for each channel.

Substitution of components may impair intrinsic safety.

CSA Installation drawing 6333QC02-V2R0

For safe installation of the single channel 6333A1A or the two channel 6333A1B the following must be observed. The module shall only be Installed by qualified personnel who are familiar with the national and international laws, directives and standards that apply to this area.

Marking
Class I, Division 2, Group A,B,C,D T6…T4
Ex nA[ic] IIC T6…T4
Class I Zone 2 AEx nA[ic] IIC T6…T4

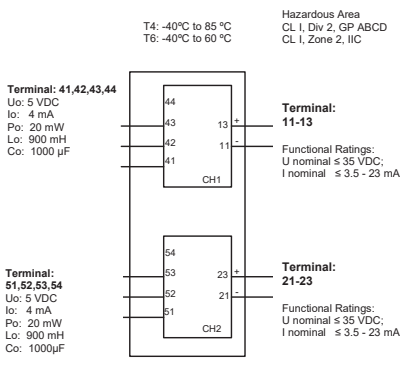

NI Installation instructions

The transmitter must be installed in an enclosure providing a degree of protection of at least IP54 according to IEC60529 that is suitable for the application and is correctly installed. Cable entry devices and blanking elements shall fulfill the same requirements. If the enclosure is made of non-metallic materials or of painted metal, electrostatic charging shall be avoided.
Use supply wires with a rating of at least 5 K above the ambient temperature.
Supply from a Class 2 Power Supply with Transient protection or equivalent.

WARNING: Substitution of components may impair suitability for Class I, Division 2
AVERTISSEMENT: la substitution de composants peut nuire à l'aptitude à la Classe I, Division 2.

WARNING: Do not disconnect equipment unless power has been switched off or the area is known to be safe.
AVERTISSEMENT: Ne débranchez pas l'équipement sauf si l'alimentation a été coupée ou si la zone est connue pour être sûre.

Non Incendive field wiring installation
The non incendive field Wiring Circuit concept allows interconnection of Nonincendive Field wiring Apparatus with Associated Nonincendive Field Wiring Apparatus or Assosicated Intrinsically Safe Apparatus or Associated Apparatus not specially examined in combination as a syatem using any of the wiring methods permitted for unclassified locations,
Voc < Vmax, Ca ≥ Ci + Ccable , La ≥ Li + Lcable.

FM Installation drawing 6333QF01-V1R0

Hazardous (Classified) Location
Class I, Division 1, Group A,B,C,D T4..T6
Class I, Zone 0, AEx ia IIC T4..T6

Non Hazardous Location

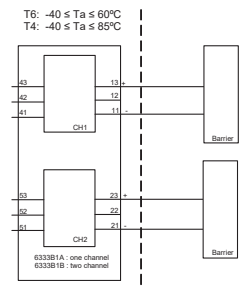

Installation notes
For installation in Class I the Transmitter must be installed in a suitable enclosure to meet installation codes stipulated in The National Electrical Code (ANSI-NFPA 70). Equipment that is FM-approved for intrinsic safety may be connected to barriers based on the Entity Concept. This concept permits interconnection of approved transmitters, meters and other devices in combinations, which have not been specifically examined by FM, provided that the agency's criteria are met. The combination is then intrinsically safe, if the entity concept is acceptable to the authority having jurisdiction over the installation.

The entity concept criteria are as follows: The intrinsically safe devices, other than barriers, must not be a source of power. The maximum voltage Ui(VMAX) and current Ii(IMAX), and maximum power Pi(Pmax), which the device can receive and remain intrinsically safe, must be equal to or greater than the voltage (Uo or VOC or Vt) and current (Io or ISC or It) and the power Po which can be delivered by the barrier. The sum of the maximum unprotected capacitance (Ci) for each intrinsically device and the interconnecting wiring must be less than the capacitance (Ca) which can be safely connected to the barrier. The sum of the maximum unprotected inductance (Li) for each intrinsically device and the interconnecting wiring must be less than the inductance (La) which can be safely connected to the barrier. The entity parameters Uo, VOC or Vt and Io, ISC or It, and Ca and La for barriers are provided by the barrier manufacturer.

Hazardous (Classified) Location
Class I, Division 2, Group A,B,C,D T4..T6
Class I, Zone 2, IIC T4..T6

Non Hazardous Location

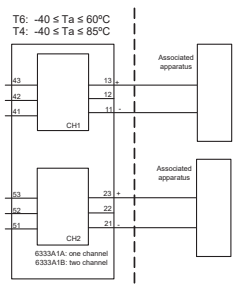

Installation notes
The Transmitter must be installed in a suitable enclosure to meet installation codes stipulated in The National Electrical Code (ANSI-NFPA 70).

To assure a Non-Incendive system the transmitter and associated apparatus must be wired in accordance with the associated apparatus manufacturers field wiring instructions and the circuit diagram shown above.

EU DECLARATION OF CONFORMITY

(6333DoC_103)

As manufacturer
PR electronics A/S, Lerbakken 10, DK-8410 Rønde
hereby declares that the following product:

Type:	**6333**
Name:	**2-wire programmable transmitter**
From serial no.:	**212340108**

is in conformity with the following directives and standards:

The EMC Directive 2014/30/EU and later amendments
EN 61326-1 : 2013
Immunity test requirements for equipment intended to be used in an industrial electromagnetic environment. For specification of the acceptable EMC performance level, refer to the electrical specifications for the device.

The ATEX Directive 2014/34/EU and later amendments
EN IEC 60079-0 : 2018, EN 60079-7 : 2015 + A1 : 2018, EN 60079-11 : 2012 and EN 60079-15 : 2010
ATEX certificate: DEKRA 20ATEX0106 X (6333A)
ATEX certificate: DEKRA 20ATEX0105 X (6333B)
ATEX notified body (type approval)
DEKRA Certification B.V.
Meander 1051, 6825 MJ Arnhem
P.O. Box 5185, 6802 ED Arnhem
The Netherlands

The RoHS2 Directive 2011/65/EU and later amendments
EN IEC 63000 : 2018

Notified body 0344
DEKRA Certification B.V.
Meander 1051, 6825 MJ Arnhem
P.O. Box 5185, 6802 ED Arnhem
The Netherlands

This declaration of conformity is issued under the sole responsibility of the manufacturer.

Rønde, 4 August 2022

Stig Lindemann, CTO
Manufacturer's signature