PERFORMANCE
MADE
SMARTER

Product manual

9113-EMP

Temperature / mA converter, EMPHASIS-assessed

TEMPERATURE | I.S. INTERFACES | COMMUNICATION INTERFACES | MULTIFUNCTIONAL | ISOLATION | DISPLAY

No. 9113-EMPV113-UK
From serial no.: 261644167

PR electronics

6 Product Pillars
to meet your every need

Individually outstanding, unrivalled in combination

With our innovative, patented technologies, we make signal conditioning smarter and simpler. Our portfolio is composed of six product areas, where we offer a wide range of analog and digital devices covering over a thousand applications in industrial and factory automation. All our products comply with or surpass the highest industry standards, ensuring reliability in even the harshest of environments and have a 5-year warranty for greater peace of mind.

Temperature

Our range of temperature transmitters and sensors provides the highest level of signal integrity from the measurement point to your control system. You can convert industrial process temperature signals to analog, bus or digital communications using a highly reliable point-to-point solution with a fast response time, automatic self-calibration, sensor error detection, low drift, and top EMC performance in any environment.

I.S. Interface

We deliver the safest signals by validating our products against the toughest safety standards. Through our commitment to innovation, we have made pioneering achievements in developing I.S. interfaces with SIL 2 Full Assessment that are both efficient and cost-effective. Our comprehensive range of analog and digital intrinsically safe isolation barriers offers multifunctional inputs and outputs, making PR an easy-to-implement site standard. Our backplanes further simplify large installations and provide seamless integration to standard DCS systems.

Communication

We provide inexpensive, easy-to-use, future-ready communication interfaces that can access your PR installed base of products. All the interfaces are detachable, have a built-in display for readout of process values and diagnostics, and can be configured via push-buttons. Product specific functionality includes communication via Modbus and Bluetooth and remote access using our PR Process Supervisor (PPS) application, available for iOS and Android.

Multifunction

Our unique range of single devices covering multiple applications is easily deployable as your site standard. Having one variant that applies to a broad range of applications can reduce your installation time and training, and greatly simplify spare parts management at your facilities. Our devices are designed for long-term signal accuracy, low power consumption, immunity to electrical noise and simple programming.

Isolation

Our compact, fast, high-quality 6 mm isolators are based on microprocessor technology to provide exceptional performance and EMC-immunity for dedicated applications at a very low total cost of ownership. They can be stacked both vertically and horizontally with no air gap separation between units required.

Display

Our display range is characterized by its flexibility and stability. The devices meet nearly every demand for display readout of process signals, and have universal input and power supply capabilities. They provide a real-time measurement of your process value no matter the industry, and are engineered to provide a user-friendly and reliable relay of information, even in demanding environments.

Temperature / mA converter, EMPHASIS-assessed 9113-EMP

Table of contents

Warning . . . 4
Symbol identification . . . 4
Safety instructions . . . 4
Marking . . . 5
How to demount system 9000 . . . 6
Mounting the PR 4500 communication interfaces . . . 6
Advanced features . . . 7
Application . . . 7
Technical characteristics . . . 7
Applications - 9113Ax-EMP . . . 8
Applications - 9113Bx-EMP . . . 9
Order . . . 10
Accessories . . . 10
Electrical specifications . . . 10
Configuration of sensor error check . . . 14
- Input signal outside range . . . 14
- Sensor error detection . . . 14
- Error indications . . . 15

Connections . . . 16
Block diagram . . . 17
Signal error and cable fault indications without PR 4500 . . . 18
Configuration / operating the function keys . . . 19
Routing diagram . . . 21
Routing diagram, advanced settings (ADV.SET) . . . 23
Help text overview . . . 24
IECEx Installation Drawing . . . 25
ATEX / UKEX Installation Drawing . . . 29
FM Installation Drawing . . . 33
Desenho de instalaçao INMETRO . . . 36
Document history . . . 41

Warning

The following operations should only be carried out on a disconnected device and under ESD-safe conditions:

General mounting, wire connection and disconnection.
Troubleshooting the device.

Repair of the device and replacement of circuit breakers must be done by PR electronics A/S only.

Warning

Do not open the front plate of the device as this will cause damage to the connector for the display / programming front PR 4500.
This device contains no DIP-switches or jumpers.

Symbol identification

Triangle with an exclamation mark: Read the manual before installation and commissioning of the device in order to avoid incidents that could lead to personal injury or mechanical damage. Warning/ demand. Potentially lethal situations.

The CE mark proves the compliance of the device with the essential requirements of the directives.

The UKCA mark proves the compliance of the device with the essential requirements of the UK regulations.

The double insulation symbol shows that the device is protected by double or reinforced insulation.

Ex devices have been approved acc. to the ATEX directive for use in connection with installations in explosive areas. See installation drawings in appendix.

Safety instructions

Definitions

Hazardous voltages have been defined as the ranges: 75 to 1500 Volt DC, and 50 to 1000 Volt AC.
Technicians are qualified persons educated or trained to mount, operate, and also trouble-shoot technically correct and in accordance with safety regulations.
Operators, being familiar with the contents of this manual, adjust and operate the knobs or potentiometers during normal operation.

Receipt and unpacking

Unpack the device without damaging it and check whether the device type corresponds to the one ordered. The packing should always follow the device until this has been permanently mounted.

Environment

Avoid direct sun light, dust, high temperatures, mechanical vibrations and shock, and rain and heavy moisture. If necessary, heating in excess of the stated limits for ambient temperatures should be avoided by way of ventilation.
The device must be installed in pollution degree 2 or better.
The device is designed to be safe at least under an altitude up to 2 000 m.
The device is designed for indoor use.

Mounting

Only technicians, who are familiar with the technical terms, warnings, and instructions in the manual and who are able to follow these, should connect the device. Should there be any doubt as to the correct handling of the device, please contact your local distributor or, alternatively,

PR electronics A/S
www.prelectronics.com

The use of stranded wires is not permitted for mains wiring except when wires are fitted with cable ends.

Stranded wire should be installed with an insulation stripping length of 5 mm or via a suitable insulated terminal such as a bootlace ferrule.

Descriptions of input / output and supply connections are shown in the block diagram and on the side label.

The device must be supplied from a Power Supply with electrical protection feature SELV or otherwise confirmed to have double or reinforced insulation. A power switch shall be easily accessible and close to the device. The power switch shall be marked as the disconnecting unit for the device.

For installation on Power Rail 9400 the power is supplied by Power Control Unit 9410.

Year of manufacture can be taken from the first two digits in the serial number.

Calibration and adjustment

During calibration and adjustment, the measuring and connection of external voltages must be carried out according to the specifications of this manual. The technician must use tools and instruments that are safe to use.

Normal operation

Operators are only allowed to adjust and operate devices that are safely fixed in panels, etc., thus avoiding the danger of personal injury and damage. This means there is no electrical shock hazard, and the device is easily accessible.

Cleaning

When disconnected, the device may be cleaned with a cloth moistened with distilled water.

Liability

To the extent the instructions in this manual are not strictly observed, the customer cannot advance a demand against PR electronics A/S that would otherwise exist according to the concluded sales agreement.

Label example

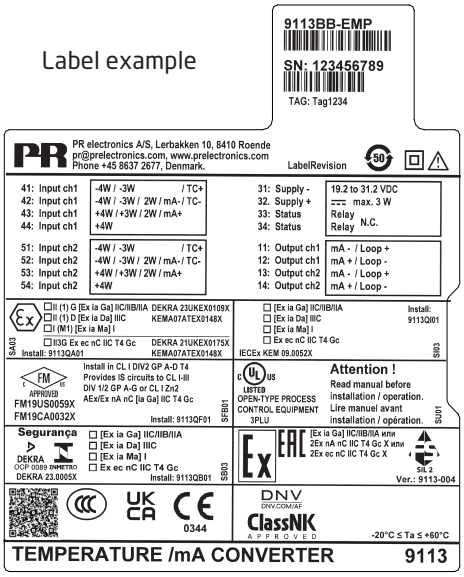

Marking

When this product has been installed as Ex ia or / and ec, use a permanent marker in the appropriate box to indicate the type of installation on the label.

How to demount system 9000

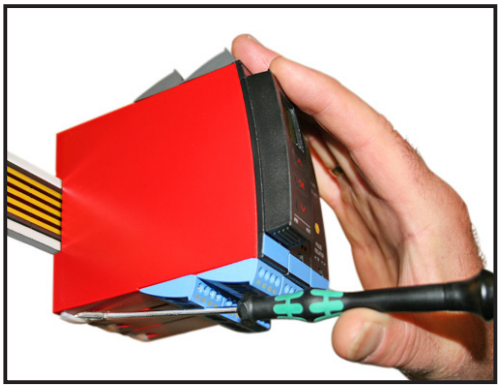

Picture 1:
By lifting the bottom lock, the device is detached from the DIN rail.

Mounting the PR 4500 communication interfaces

1: Insert the tabs of the PR 4500 into the slots at the top of the device.
2: Hinge the PR 4500 down until it snaps into place.

Demounting of the PR 4500 communication interfaces

3: Push the release button on the bottom of the PR 4500 and hinge the PR 4500 out and up.
4: With the PR 4500 hinged up, remove from the slots at the top of the device.

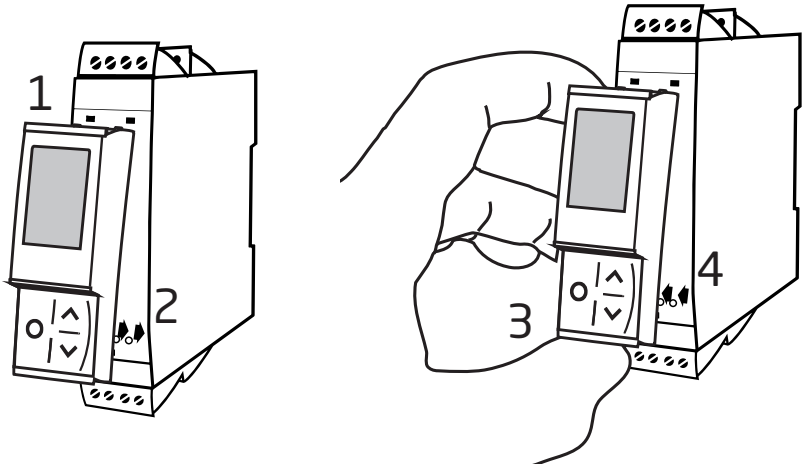

Temperature / mA converter, EMPHASIS-assessed
9113-EMP

- Input for RTD, TC and mA
- Active / passive mA output via the same two terminals
- 1 or 2 channels
- EMPHASIS-assessed instrument for nuclear industry
- SIL 2-certified via Full Assessment

Advanced features

- Configuration and monitoring by way of PR 4500 detachable communication interfaces; process calibration and signal simulation.
- Copying of the configuration from one device to others of the same type via the PR 4500.
- TC inputs can use either the internal CJC or a terminal with a built-in Pt100 sensor (PR 5910 / PR 5910Ex, channel ; PR 5913 / PR 5913Ex, channel 2) for higher accuracy.
- Advanced monitoring of internal communication and stored data.
- SIL 2 functionality is optional and must be activated in a menu point.

Application

- 9113Ax-EMP can be mounted in the safe area or in zone 2 / Class I, Division 2, Groups A, B, C, D.
- 9113Bx-EMP can be mounted in the safe area or in zone 2 / Class 1, Division 2 and receive signals from zone 0, 1, 2 and zone 20, 21, 22 including mining / Class I/II/III, Division 1, Gr. A-G.
- Conversion and scaling of temperature (Pt, Ni and TC) and active current signals.
- The 9113-EMP has been designed, developed and certified for use in SIL 2 applications according to the requirements of IEC 61508.
- Failure rates for 9113-EMP correspond to Performance Level “d” according to ISO-13849.

Technical characteristics

- 1 green and 2 red front LEDs indicate operation status and malfunction.
- 2.6 kVAC galvanic isolation between input, output and supply.
- Can be supplied separately or installed on power rail, PR type 9400.

Applications - 9113Ax-EMP

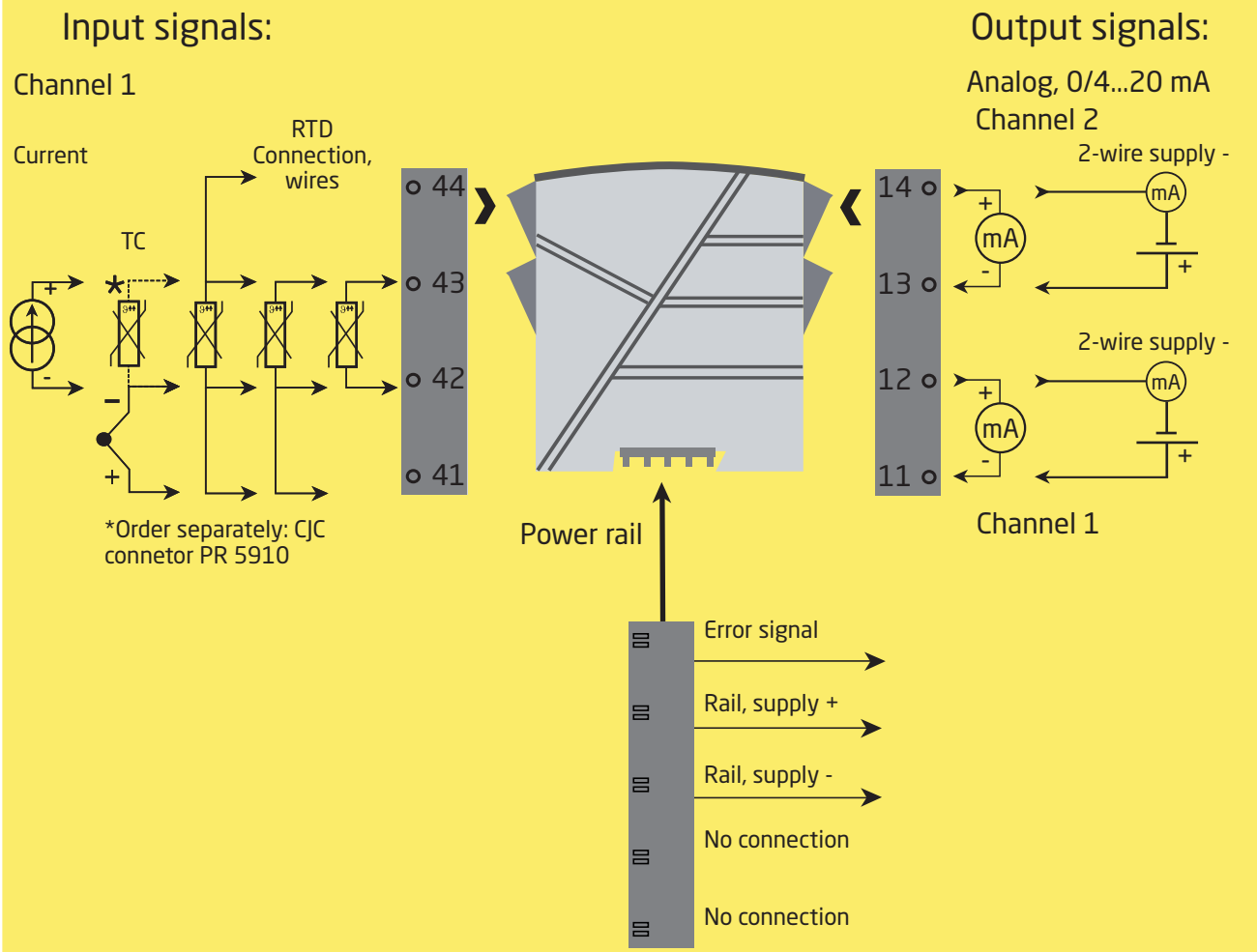

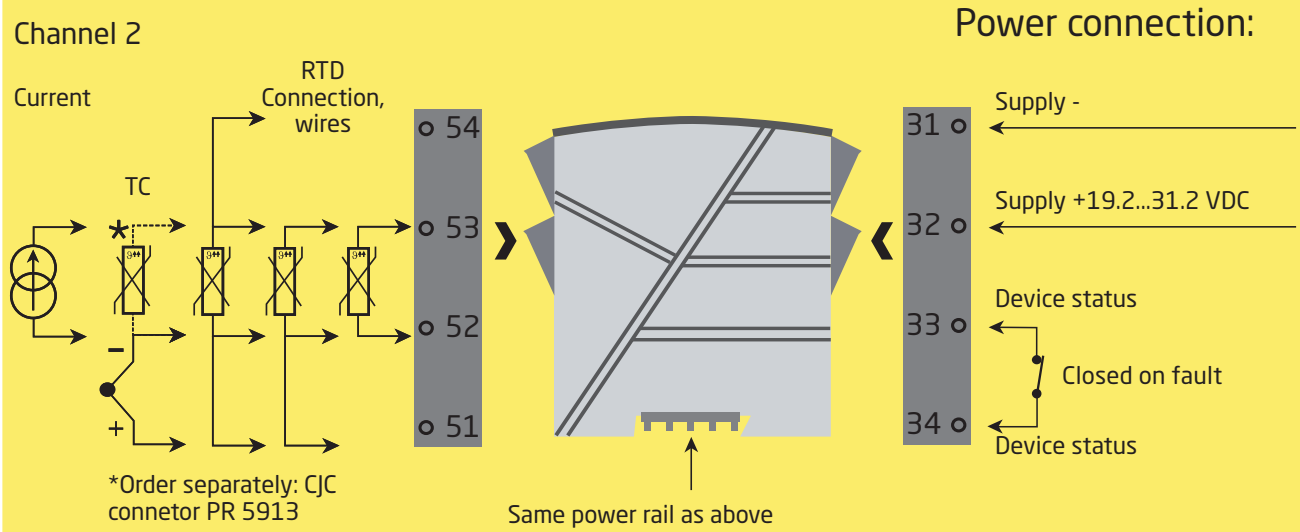

Zone 2 & Cl. 1, Div. 2, gr. A-D
or Safe Area

Applications - 9113Bx-EMP

Input signals:

Channel 1

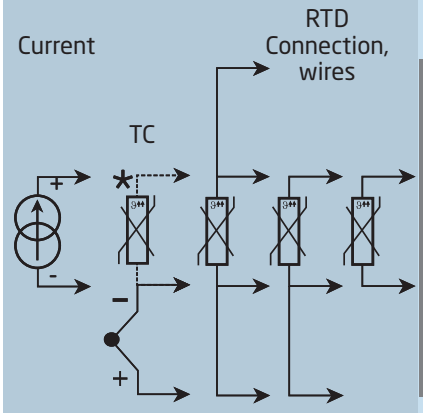

*Order separately: CJC connetor PR 5910Ex

Channel 2

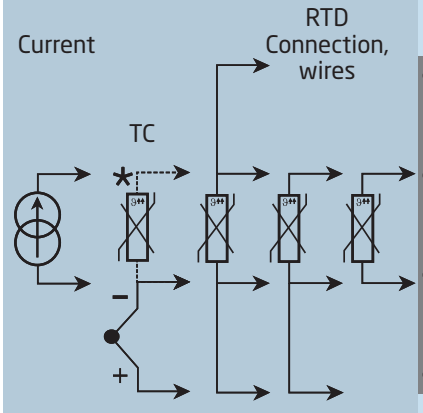

*Order separately: CJC connetor PR 5913Ex

Zone 0, 1, 2, 20, 21, 22, M1 & Cl. I/II/III, Div. 1 gr. A-G

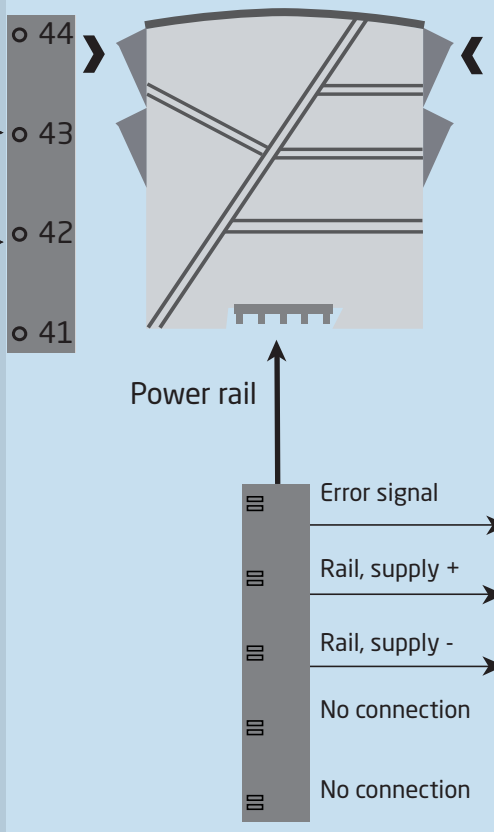

Output signals:

Analog, 0/4...20 mA

Channel 2

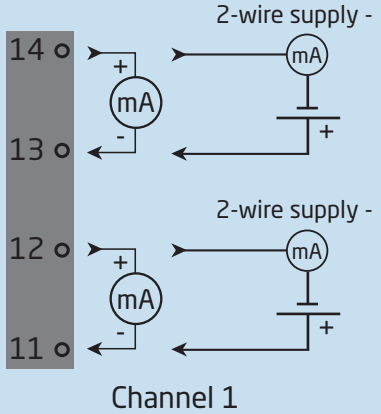

Power connection:

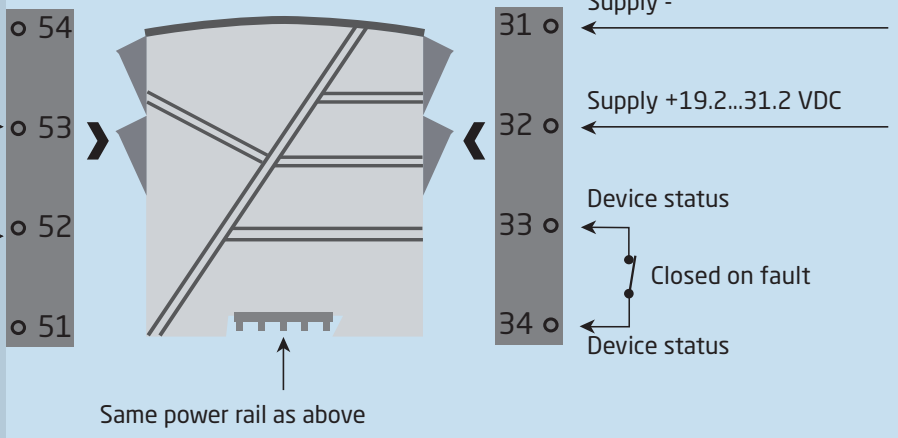

Zone 2 & Cl. 1, Div. 2, gr. A-D or Safe Area

Order

Type	Associated apparatus		Channels		EMPHASIS-assessed
9113	No	: A	Single	: A	-EMP
	Yes	: B	Double	: B	

Example: 9113BB-EMP

Accessories

4510 = Display / programming front
4511 = Modbus communication enabler
4512 = Bluetooth communication enabler
5910 = CJC connector, channel 1, for 9113AA-EMP
5913 = CJC connector, channel 2, for 9113AB-EMP
5910Ex = CJC connector, channel 1, for 9113BA-EMP
5913Ex = CJC connector, channel 2, for 9113BB-EMP
9400 = Power rail
9404 = Module stop for rail
9410 = Power control unit
9421 = Power supply 24 V - Ex ec nC

Electrical specifications

Environmental conditions

Operating temperature . . . . . -20°C to +60°C
Storage temperature . . . . . -20°C to +85°C
Calibration temperature . . . . . 20...28°C
Relative humidity . . . . . < 95% RH (non-cond.)
Protection degree IP20
Installation in . . . . . Pollution degree 2 & overvoltage category II.

Mechanical specifications

Dimensions (HxWxD) . . . . . 109 x 23.5 x 104 mm
Dimensions (HxWxD) w/ PR 4500 . . . . . 109 x 23.5 x 131 mm
Weight approx. . . . . 250 g
DIN rail type . . . . . DIN EN 60715 - 35 mm
Wire size . . . . . 0.13...2.08 mm^2 / AWG 26...14 stranded wire
Stripping length . . . . . 5 mm
Screw terminal torque . . . . . 0.5 Nm
Vibration . . . . . IEC 60068-2-6
2...13.2 Hz . . . . . ±1 mm
13.2...100 Hz . . . . . ±0.7 g

Common electrical specifications

Supply voltage . . . . . 19.2...31.2 VDC
Fuse . . . . . 400 mA SB / 250 VAC

Type	Description	Max. power dissipation	Max. required power
9113xA-EMP	1 channel	≤ 0.8 W	≤ 0.8 W
9113xB-EMP	2 channels	≤ 1.4 W	≤ 1.4 W

Max. required power is the maximum power needed at terminals 31 and 32.
Max. power dissipation is the maximum power dissipated by the device.
If the 9113B-EMP is used with the PR 4500 communication interfaces, then add 40 mW to the max. power dissipation and 70 mW to the max. required power for each device with the PR 4500.

Isolation - test / working:
Input to any . . . . . 2.6 kVAC / 300 VAC reinforced isolation
Analog output to supply . . . . . 2.6 kVAC / 300 VAC reinforced isolation
Status relay to supply . . . . . 1.5 kVAC / 150 VAC reinforced isolation
Communications interface . . . . . PR 4500
Signal dynamics, input / output . . . . . 24 bit / 16 bit
Signal / noise ratio . . . . . Min. 60 dB (0...100 kHz)
Response time (0...90%, 100...10%):
Temperature input, programmable . . . . . 1...60 s
mA / V input, programmable . . . . . 0.4...60 s
Accuracy, the greater of the general and basic values:

General values		
Input type	Absolute accuracy	Temperature coefficient
All	≤ ±0.1% of span	≤ ±0.01% of span / °C

Basic values		
Input type	Basic accuracy	Temperature coefficient
mA	≤ ±16 µA	≤ ±1.6 µA / °C
Pt100, Pt200, Pt 1000	≤ ±0.2°C	≤ ±0.02°C/°C
Pt500, Ni100, Ni120, Ni 1000	≤ ±0.3°C	≤ ±0.03°C/°C
Pt50, Pt400, Ni50	≤ ±0.4°C	≤ ±0.04°C/°C
Pt250, Pt300	≤ ±0.6°C	≤ ±0.06°C/°C
Pt20	≤ ±0.8°C	≤ ±0.08°C/°C
Pt10	≤ ±1.4°C	≤ ±0.14°C/°C
TC type: E, J, K, L, N, T, U	≤ ±1°C	≤ ±0.1°C/°C
TC type: R, S, W3, W5, LR	≤ ±2°C	≤ ±0.2°C/°C
TC type: B 160...400°C	≤ ±4.5°C	≤ ±0.45°C/°C
TC type: B 400...1820°C	≤ ±2°C	≤ ±0.2°C/°C

EMC - immunity influence. . . . . < ±0.5% of span
Extended EMC immunity:
NAMUR NE 21, A criterion, burst . . . . . < ±1% of span

RTD input

Input for RTD types:
Pt10*, Pt20*, Pt50*, Pt100, Pt200, Pt250, Pt300, Pt400, Pt500, Pt1000
Ni50, Ni100, Ni120, Ni1000

Input type	Min. value	Max. value	Standard
Pt100	-200°C	+850°C	IEC 60751
Ni100	-60°C	+250°C	DIN 43760

Cable resistance per wire (max.) . . . . . 50 Ω
Sensor current . . . . . Nom. 0.2 mA
Effect of sensor cable resistance (3- / 4-wire) . . . . . < 0.002 Ω / Ω
Sensor error detection . . . . . Programmable ON / OFF
Sensor error current:
when detecting . . . . . < 2 µA
else . . . . . 0 µA
* No short circuit detection for Pt10, Pt20 and Pt50

TC input

Type	Min. value	Max. value	Standard
B	0°C	+1820°C	IEC 60584-1
E	-100°C	+1000°C	IEC 60584-1
J	-100°C	+1200°C	IEC 60584-1
K	-180°C	+1372°C	IEC 60584-1
L	-200°C	+900°C	DIN 43710
N	-180°C	+1300°C	IEC 60584-1
R	-50°C	+1760°C	IEC 60584-1
S	-50°C	+1760°C	IEC 60584-1
T	-200°C	+400°C	IEC 60584-1
U	-200°C	+600°C	DIN 43710
W3	0°C	+2300°C	ASTM E988-90
W5	0°C	+2300°C	ASTM E988-90
LR	-200°C	+800°C	GOST 3044-84

Cold junction compensation (CJC):
via external sensor in connector 5910 . . . . . 20...28°C ≤ ±1°C
-20...20°C and 28...70°C ≤ ±2°C
via internal CJC sensor . . . . . ±(2.0°C + 0.4°C * Δt)
Δt = internal temperature - ambient temperature
Sensor error detection . . . . . Programmable ON or OFF
(only wire breakage)
Sensor error current:
when detecting . . . . . Nom. 2 µA
else . . . . . 0 µA

Current input

Measurement range . . . . . 0...23 mA
Programmable measurement ranges . . . . . 0...20 and 4...20 mA
Input resistance . . . . . Nom. 20 Ω + PTC 50 Ω
Sensor error detection . . . . . Programmable ON / OFF
Only 4...20 mA (NAMUR)

Current output

Signal range (span) . . . . . 0...23 mA
Programmable signal ranges . . . . . 0...20 / 4...20 / 20...0 and 20...4 mA
Load . . . . . ≤ 600 Ω
Load stability . . . . . ≤ 0.01% of span / 100 Ω
Sensor error detection . . . . . 0 / 3.5 / 23 mA / none
NAMUR NE 43 Upscale / Downscale . . . . . 23 mA / 3.5 mA

Output limitation:

on 4...20 and 20...4 mA signals	3.8...20.5 mA
on 0...20 and 20...0 mA signals	0...20.5 mA
Current limit	≤ 28 mA

Passive 2-wire output installation

Max. external 2-wire supply	26 VDC
Max. load resistance [Ω]	(Vsupply - 3.5) / 0.023 A
Effect of external 2-wire supply voltage variation	< 0.005% of span / V

Status relay output terminal 33-34

Relay function	Bistable, closed on fault
Max. voltage	125 VAC / 110 VDC
Max. current	0.5 AAC / 0.3 ADC
Max. voltage - hazardous installation	32 VAC / 32 VDC
Max. current - hazardous installation	0.5 AAC / 1 ADC

of span = of the currently selected measurement range

Observed authority requirements

EMC	2014/30/EU & UK SI 2016/1091
ATEX	2014/34/EU & UK SI 2016/1107
LVD	2014/35/EU & UK SI 2016/1101
RoHS	2011/65/EU & UK SI 2012/3032
EAC	TR-CU 020/2011
EAC LVD	TR-CU 004/2011
EAC Ex	TR-CU 012/2011

Approvals

DNV-GL, Ships & Offshore	TAA00000JD
ClassNK	TA24034M
c UL us, UL 61010-1	E314307

I.S. / Ex

ATEX	KEMA 07ATEX0148X
IECEx	IECEx KEM 09.0052X
UKEX	DEKRA 21UKEX0175X / DEKRA 23UKEX0109X
c FM us	FM19US0059X / FM19CA0032X
INMETRO	DEKRA 23.0005X
CCC	2024322316005841
EAC Ex	EAEU KZ 7500361.01.01.08756

Functional Safety

SIL2 Certified & Fully Assessed acc. to IEC 61508

Configuration of sensor error check

Sensor error check:		
Device:	Configuration	Sensor error detection:
9113-EMP	OUT.ERR=NONE.	OFF
	Else:	ON

Visualisation in the PR 4500 of:

Input signal outside range

Outside range readout (IN.LO, IN.HI): If the valid range of the A/D converter or the polynomal is exceeded			
Input	Range	Readout	Limit
CURR	0...20 mA / 4...20 mA	IN.LO	< -1.05 mA
		IN.HI	> 25.05 mA
TEMP	TC / RTD	IN.LO	< temperature range -2°C
		IN.HI	> temperature range +2°C

Display readout below min. / above max. (-1999, 9999):			
Input	Range	Readout	Limit
All	All	-1999	Display readout <-1999
		9999	Display readout >9999

Sensor error detection

Sensor error detection (SE.BR, SE.SH):			
Input	Range	Readout	Limit
CURR	Loop break (4...20 mA)	SE.BR	<= 3.6 mA; > = 20.75 mA
TEMP	TC	SE.BR	> 10 kΩ...165 kΩ
	RTD: 2-, 3- and 4-wire For Pt10, Pt20, Pt50, Pt100, Pt200, Ni50 and Ni120	SE.BR	> 900...1000 Ω (cable > 50 Ω)
		SE.SH	< app. 15 Ω
	RTD: 2-, 3- and 4-wire for Pt250, Pt300, Pt400, Pt500, Pt1000 and Ni1000	SE.BR	> 10...12 kΩ (cable > 50 Ω)
		SE.SH	< app. 15 Ω

Error indications

Readout at hardware error		
Error search	Readout	Cause
CJC sensor error - check device temperature	CJ.ER	Defect internal CJC sensor or CJC temperature out of allowed range**
CJC connector error - check CJC-connector block	CJ.ER	Defect (or missing) CJC-connector or temperature out of allowed range**
Input error - check input connection and reset power	IN.ER	Signal levels on input beyond limits or connected to wrong terminals*
Output error - check output connections and reset power	AO.ER	Error in analog output current (SIL mode only)*
No communication	NO.CO	No communication with (PR 4500)
Flash memory error - check configuration	FL.ER CO.ER	FLASH error (configuration invalid)***
Invalid configuration type or version	TY.ER	Configuration read from EEprom has invalid type or rev. no.
Hardware error	RA.ER	RAM error*
Hardware error	IF.ER	Internal Flash error*
Hardware error	SW.ER	SW monitor error*
Hardware error	AD.ER	A/D converter error*
Hardware error	AO.SU	Analog output supply error*
Hardware error	CA.ER	Factory calibration error*
Hardware error	CM.ER	Main CPU error*
Hardware error	II.ER	Initialisation check error*
Hardware error	RS.ER	Reset error*
Hardware error	IC.ER	Input communication error*
Hardware error	M1.ER	Main CPU to Ch.1 error*
Hardware error	M2.ER	Main CPU to Ch.2 error*
Hardware error	MC.ER	Main CPU config. error*
Hardware error	MF.ER	Main CPU Flash error*
Hardware error	MR.ER	Main CPU RAM error*
Hardware error	MS.ER	Main CPU supply error*
Hardware error	MP.ER	Main CPU ProgFlow error*

!	All error indications in the display flash once per second. The help text explains the error. If the error is a sensor error, the display backlight flashes as well - this is acknowledged (stopped) by pushing the OK button.
*	Error is acknowledged by resetting the device power.
**	Error can be disregarded by selecting input type different than TC.
***	Error is acknowledged by stepping through the basic setup.

Connections

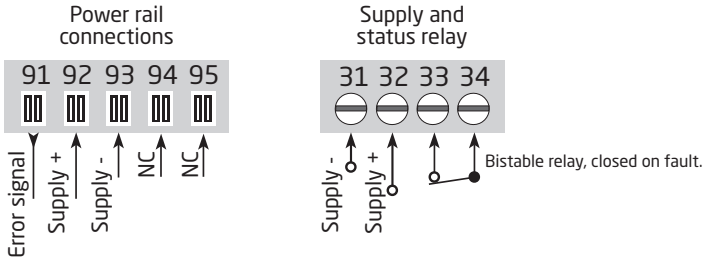

NC = no connection

Inputs:

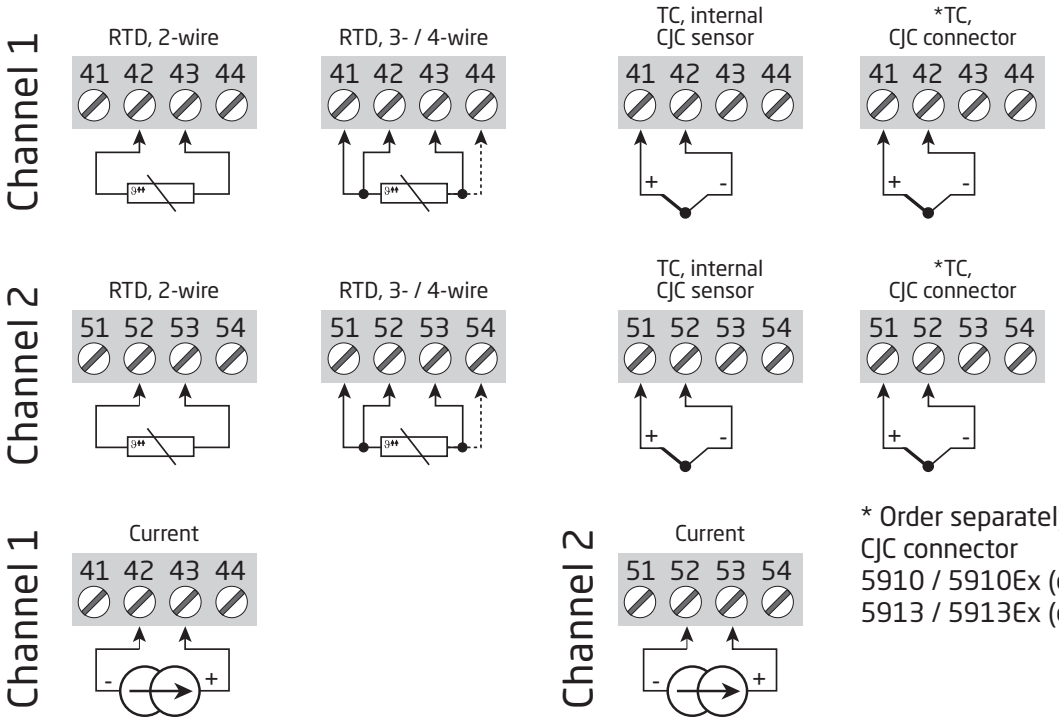

* Order separately:
CJC connector
5910 / 5910Ex (ch. 1) /
5913 / 5913Ex (ch. 2).

Outputs:

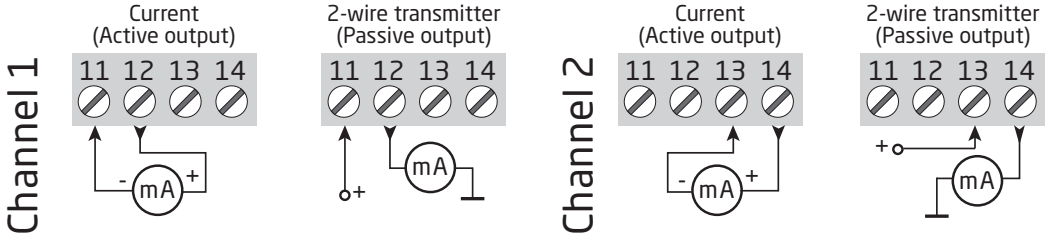

Block diagram

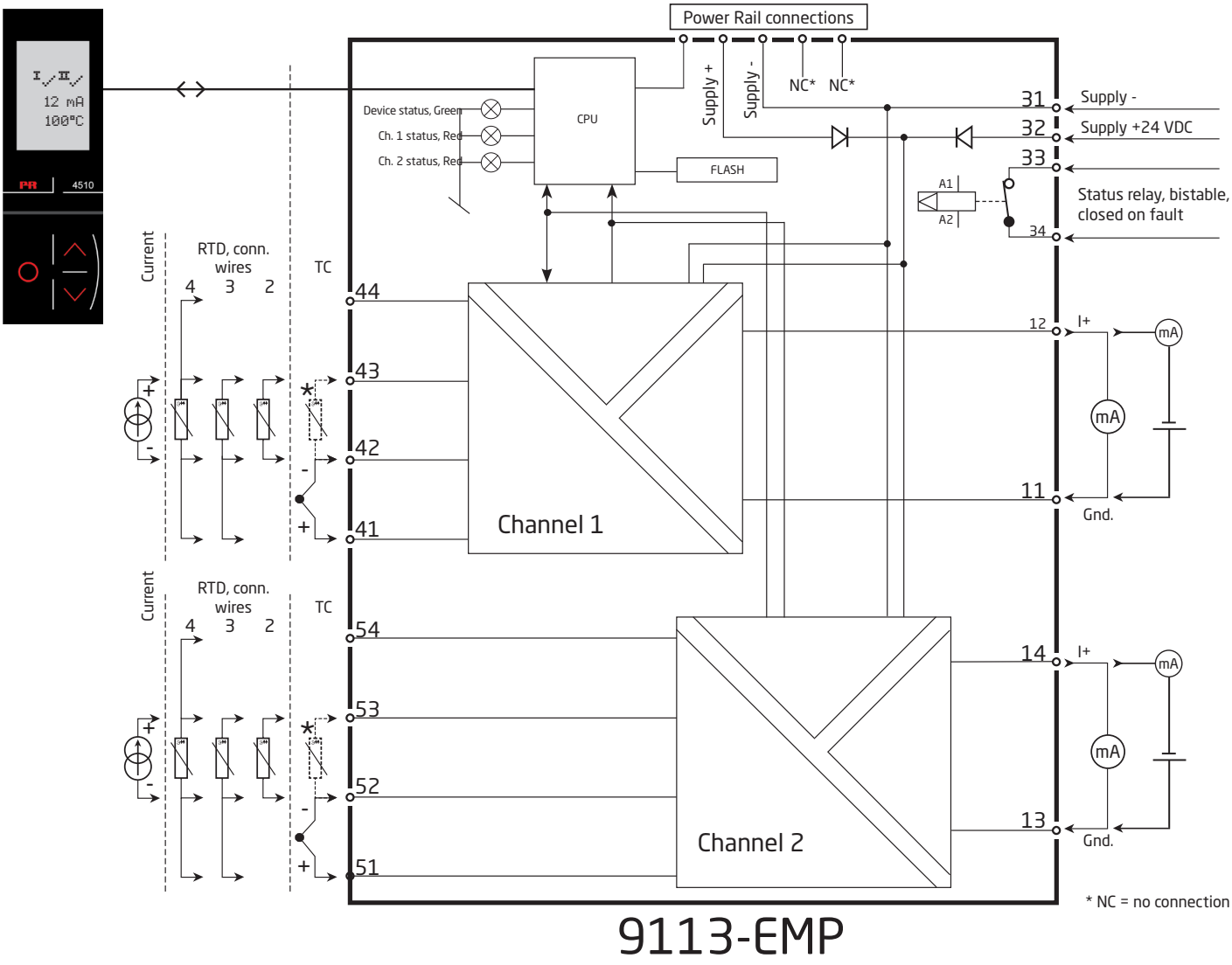

Signal error and cable fault indications without PR 4500

List of LED and error signal indications					
Condition	Green LED	Ch. 1: Red LED	Ch. 2: Red LED	Status relay (bistable)	Power rail signal status
Device OK	Flashing	OFF	OFF	Open	Open
No supply	OFF	OFF	OFF	Closed	Closed
Device defective	OFF	ON	ON	Closed	Closed
Ch. 1 defective (ch. 2 OK)	Flashing	ON	OFF	Closed	Closed
Ch. 2 defective (ch. 1 OK)	Flashing	OFF	ON	Closed	Closed
Channel 1, signal OK	Flashing	OFF	OFF	Open	Open
Ch. 1, wire short / break	Flashing	Flashing	OFF	Closed	Closed (if activateded)
Channel 2, signal OK	Flashing	OFF	OFF	Open	Open
Ch. 2, wire short / break	Flashing	OFF	Flashing	Closed	Closed (if activateded)

Configuration / operating the function keys

Documentation for routing diagram.

In general

When configuring the 9113-EMP, you will be guided through all parameters and you can choose the settings which fit the application. For each menu there is a scrolling help text which is automatically shown in line 3 on the display.

Configuration is carried out by use of the 3 function keys:

- ⌃ will increase the numerical value or choose the next parameter
- ⌄ will decrease the numerical value or choose the previous parameter
- OK will save the chosen value and proceed to the next menu

When configuration is completed, the display will return to the default state 1.0. Pressing and holding OK will return to the previous menu or return to the default state (1.0) without saving the changed values or parameters.

If no key is activated for 1 minute, the display will return to the default state (1.0) without saving the changed values or parameters.

Further explanations

Password protection: Programming access can be blocked by assigning a password. The password is saved in the device in order to ensure a high degree of protection against unauthorised modifications to the configuration. If the configured password is not known, please contact PR electronics support - www.prelectronics.com/contact.

Selection of units

By selection of temperature input you can choose which process units should be shown in the display (see table). The process value is always displayed in Celsius or Fahrenheit. This is selected in the menu point after selection of temperature input.

CJC

In the CJC menu you can choose between CJC connector and internal cold junction compensation. The CJC connecter (PR 5910 / PR 5910Ex for channel 1; PR 5913 / PR 5913Ex for channel 2) must be ordered separately.

Signal and sensor error indication via PR 4500 communication interface

Sensor error (see limits in the table) is displayed as SE.BR (sensor break) or SE.SH (sensor short). Signals outside the selected range (not sensor error, see table for limits) are displayed as IN.LO indicating low input signal or IN.HI indicating high input signal. The error indication is displayed as text in line 2 for channel 1 and line 3 for channel 2 and at the same time the backlight flashes. Line 4 of the display is a status line which shows whether the device is SIL-locked (static dot = SIL-locked and flashing dot = not SIL-locked) as well as status for communication COM (running circle) indicating correct functioning of the PR 4500.

Signal and sensor error indication without PR 4500 communication interface

Status of the unit can also be read from the 3 LEDs in the front of the device.

Green flashing LED indicates normal operation.
No light in the green LED indicates lack of supply voltage or error in the device.
Steady red LED indicates fatal error.
Flashing red LED indicates sensor error.

Advanced functions

The unit gives access to a number of advanced functions which can be reached by answering “Yes” to the point “ADV.SET”.

Display setup: Here you can adjust the brightness contrast and the backlight. Setup of TAG numbers with 5 alphanumerics. Selection of functional readout in line 2 and 3 of the display - choose between readout of analog input, analog output or tag no or alternating display.

Two-point process calibration: The device can be process-calibrated in 2 points to fit a given input signal . A low input signal (not necessarily 0%) is applied and the actual value is entered via PR 4500. Then a high signal (not necessarily 100%) is applied and the actual value is entered via PR 4500. If you accept to use the calibration, the device will work according to this new adjustment. If you later reject this menu point or choose another type of input signal the device will return to factory calibration.
For initial activation of process calibration both Calibration Low and Calibration High must be performed.

Process simulation function: In the menu point "EN.SIM" it is possible to simulate an input signal by means of the arrow keys and thus control the output signal up or down. You must exit the menu by pressing OK (no time-out).
The simulation function exits automatically, if the PR 4500 is detached.

Password: Here you can choose a password between 0000 and 9999 in order to protect the unit against unauthorised modifications to the configuration. The unit is delivered default without password.

Memory: In the memory menu you can save the configuration of the device in the PR 4500, and then move the PR 4500 onto another device of the same type and download the configuration in the new device.
Calibration parameters and relay latch status (where applicable) are device-specific and will not be included in the saved configuration.

Language: In the menu "LANG" you can choose between 7 different language versions of help texts that will appear in the menu. You can choose between UK, DE, FR, IT, ES, SE and DK.

Power rail: In the menu "RAIL" you can choose if sensor errors are transmitted to the central surveillance in the PR 9410 power control unit.

Safety Integrity Level (SIL): See Safety Manual for details.

PR SIL2 IEC 61508 CERTIFIED Full assessment

Routing diagram

If no key is activated for 1 minute, the display will return to the default state 1.0 without saving configuration changes.

⌃ Increase value / choose next parameter

⌄ Decrease value / choose previous parameter

OK Save the chosen value and proceed to the next menu

Hold OK Back to previous menu / return to menu 1.0 without saving.

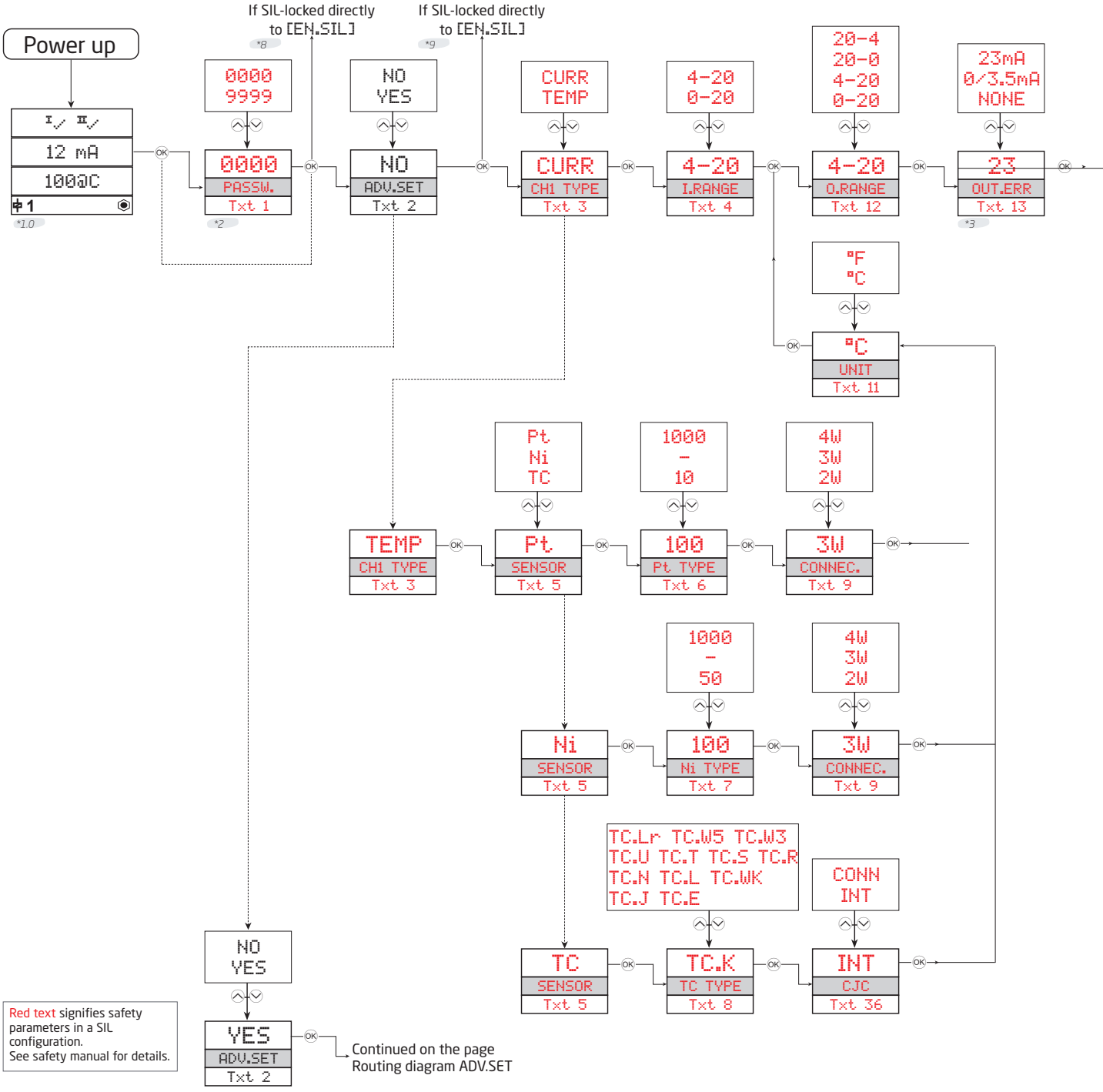

Red text signifies safety parameters in a SIL configuration.
See safety manual for details.

*1.0 Default state.
Line 1 shows input status
Line 2 and 3 show analog input / output value or TAG no. and units.
Line 4 shows status for communication and whether the device is SIL-locked.
Static dot = SIL-locked and flashing dot = not SIL-locked.

*2 Only if password-protected.

*3 Not valid for 0...20 mA input signal.

*4 Only if input signal is temperature.
Min. and max. acc. to selected sensor type

*8 Branching to SIL from this point valid for:
All 4510 devices.
4511 devices with serial no. lower than 211001001.
4512 devices with serial no. lower than 211065001.

*9 Branching to SIL from this point valid for:
4511 devices with serial no from 211001001.
4512 devices with serial no from 211065001.

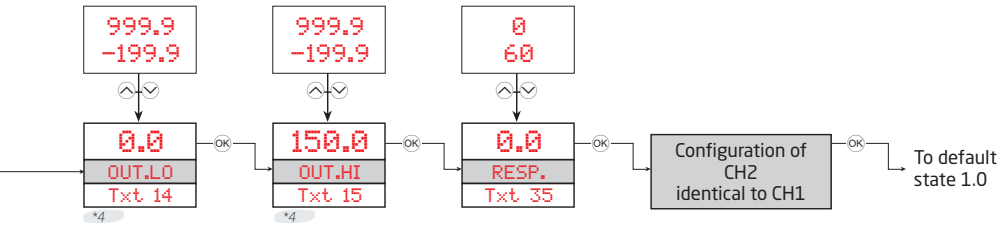

*5 Only if the configuration is not protected by a password.

*10 Not available on PR 4500 if SIL-locked.
Only for 4512 devices with serial no. from 211065001 and for 4511 devices with serial no. from 211001001.

Routing diagram, advanced settings (ADV.SET)

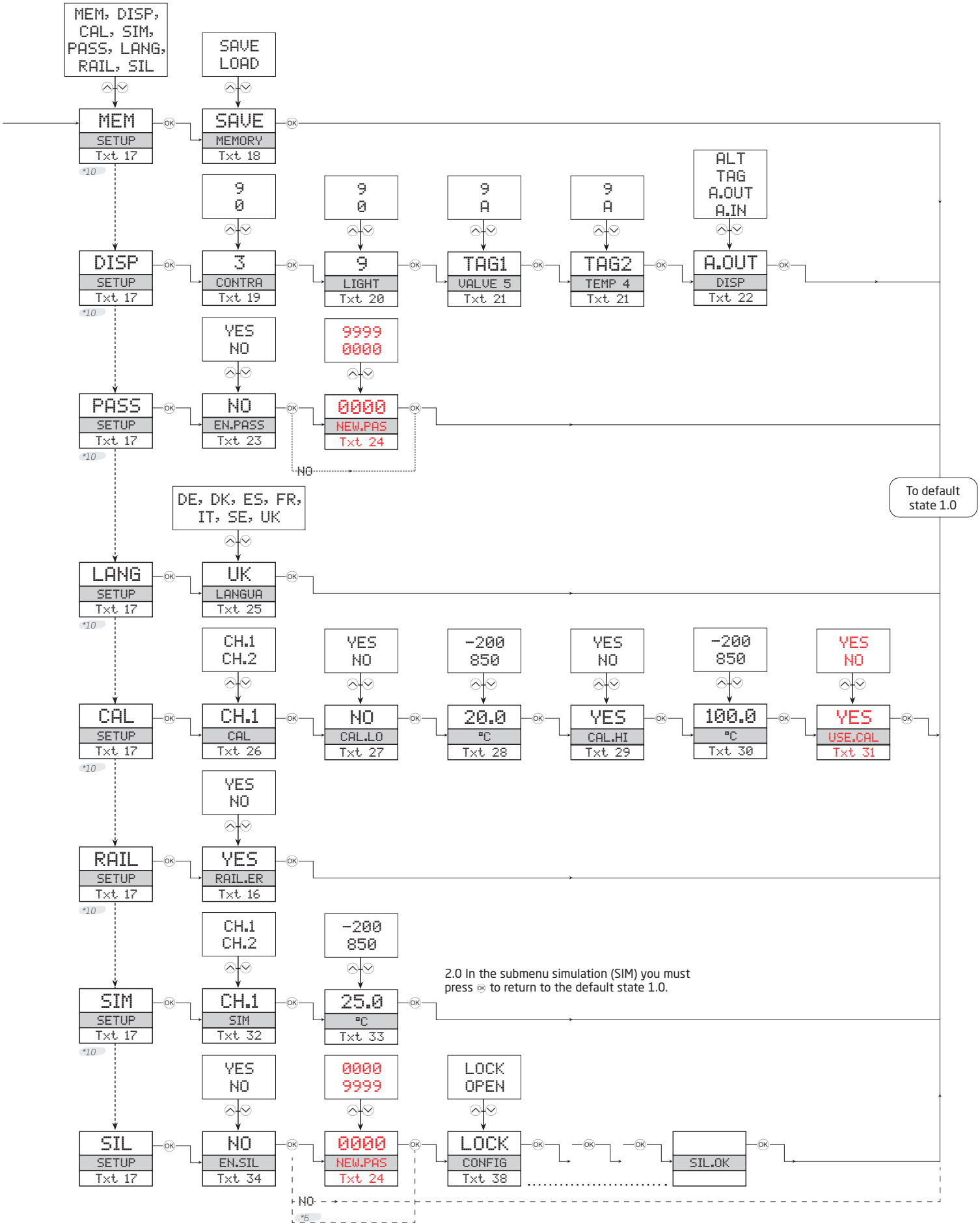

Help text overview

[01] Set correct password
[02] Enter advanced setup menu?
[03] Select temperature input
Select current input
[04] Select 0-20 mA input range
Select 4-20 mA input range
[05] Select TC sensor type
Select Ni sensor type
Select Pt sensor type
[06] Select Pt10 sensor type
Select Pt20 sensor type
Select Pt50 sensor type
Select Pt100 sensor type
Select Pt200 sensor type
Select Pt250 sensor type
Select Pt300 sensor type
Select Pt400 sensor type
Select Pt500 sensor type
Select Pt1000 sensor type
[07] Select Ni50 sensor type
Select Ni100 sensor type
Select Ni120 sensor type
Select Ni1000 sensor type
[08] Select TC-B sensor type
Select TC-E sensor type
Select TC-J sensor type
Select TC-K sensor type
Select TC-L sensor type
Select TC-N sensor type
Select TC-R sensor type
Select TC-S sensor type
Select TC-T sensor type
Select TC-U sensor type
Select TC-W3 sensor type
Select TC-W5 sensor type
Select TC-Lr sensor type
[09] Select 2-wire sensor connection
Select 3-wire sensor connection
Select 4-wire sensor connection
[11] Select Celsius as temperature unit
Select Fahrenheit as temperature unit
[12] Select 0-20 mA output range
Select 4-20 mA output range
Select 20-0 mA output range
Select 20-4 mA output range
[13] Select no error action - output undefined at error
Select downscale at error
Select NAMUR NE43 downscale at error
Select NAMUR NE43 upscale at error
[14] Set temperature for analog output low
[15] Set temperature for analog output high
[16] Enable Rail status signal output?
[17] Enter SIL setup
Enter simulation mode
Enter RAIL setup
Perform process calibration
Enter language setup
Enter password setup
Enter display setup
Perform memory operations
[18] Load saved configuration into 9113-EMP
Save 9113-EMP configuration in 4510
[19] Adjust LCD contrast
[20] Adjust LCD backlight
[21] Write a 5-character channel TAG
[22] Show analog input value in display
Show analog output value in display
Show TAG in display
Alternate shown information in display
[23] Enable password protection?
[24] Set new password
[25] Select language
[26] Select channel to calibrate
[27] Calibrate input low to process value?
[28] Set value for low calibration point
[29] Calibrate input high to process value?
[30] Set value for high calibration point
[31] Use process calibration values?
[32] Select channel to simulate
[33] Set the input simulation value
[34] Enable SIL configuration lock?
0-20 mA is not a valid output range for SIL operation
[35] Set Analog output response time in seconds
[36] Select internal temperature sensor
Select CJC connector (accessory)
[38] Configuration SIL status (Open / Locked)
[40] Sensor wire breakage
[41] Sensor short circuit
[42] Input underrange
[43] Input overrange
[44] Input error - check input connections and reset power
[45] Output error - check connections and reset power
[46] Flash memory error - check configuration
[47] Invalid configuration type or version
[48] Hardware error
[49] CJC sensor error - check device temperature
[50] CJC error - check CJC connector block
[51] No communication

LERBAKKEN 10, 8410 RØNDE DENMARK

IECEx Installation drawing 9113QI01 V6R0

For safe installation of 9113 the following must be observed. The module shall only be installed by qualified personnel who are familiar with the national and international laws, directives and standards that apply to this area.
Year of manufacture can be taken from the first two digits in the serial number.

For Installation in Zone 2 the following must be observed.
The 4501 programming module is to be used solely with PR electronics modules. It is important that the module is undamaged and has not been altered or modified in any way. Only 4501 modules free of dust and moisture shall be installed.

IECEx Certificate:	IECEx KEM 09.0052 X
Marking 9113Bx:	[Ex ia Ga] IIC/IIB/IIA [Ex ia Da] IIIC [Ex ia Ma] I
Marking 9113Bxx, 9113Axx	II 3 G Ex ec nC IIC T4 Gc
Standards:	IEC60079-0:2017, IEC60079-11:2011, IEC60079-15:2017, IEC60079-7:2015-A1:2017

Supply terminal (31,32)

Voltage:	19.2 – 31.2 VDC

Status Relay. terminal (33,34)		Zone 2 Installation
Voltage max:	125 VAC / 110 VDC	32 VAC / 32 VDC
Power max:	62,5 VA / 32 W	16 VA / 32 W
Current max:	0.5 AAC / 0.3 ADC	0.5 AAC / 1 ADC

Installation notes:

Install in pollution degree 2, overvoltage category II as defined in IEC60664-1

Do not separate connectors when energized and an explosive gas mixture is present.
Do not mount or remove modules from the Power Rail when an explosive gas mixture is present.
Disconnect power before servicing.
The wiring of unused terminals is not allowed.

In type of protection [Ex ia Da] the parameters for intrinsic safety for gas group IIB are applicable.

For installation in Zone 2, the module shall be installed in an enclosure in type of protection Ex n or Ex e, providing a degree of protection of at least IP54. Cable entry devices and blanking elements shall fulfill the same requirements.

For installation on Power Rail in Zone 2, only Power Rail type 9400 supplied by Power Control Unit type 9410 (Type Examination Certificate IECEx KEM 08.0025X) is allowed.

Max. screw terminal torque 0.5 Nm.
Stranded wire should be installed with an insulation stripping length of 5 mm or via a suitable insulated terminal such as a bootlace ferrule.

LERBAKKEN 10, 8410 RØNDE DENMARK

9113Bx Installation:

Hazardous area
Zone 0,1,2, 20, 21, 22

Non Hazardous area
or Zone 2

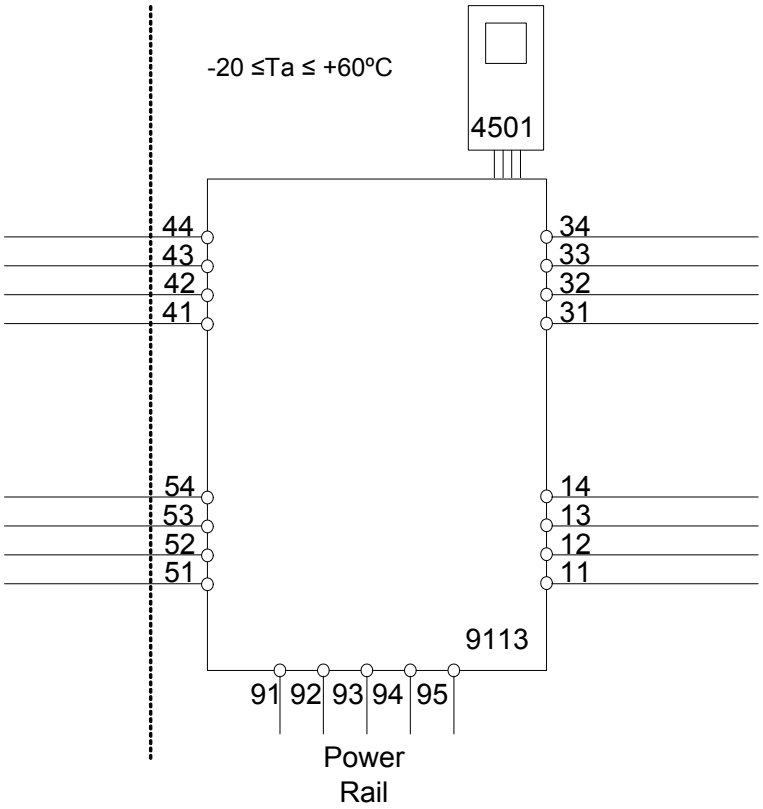

Ex input
CH1 (terminal 41,42,43,44)
CH2 (terminal 51,52,53,54)

U_o: 8.7 V
I_o: 18.4 mA
P_o: 40 mW
Lo/Ro 892 µH/Ω

	IIC	IIB	IIA or I
C_o.	5 µF	50 µF	1000 µF
L_o.	100 mH	300 mH	700 mH

U_i: 10 V
I_i: 30 mA
C_i: 30 nF
L_i. 820 nH

LERBAKKEN 10, 8410 RØNDE DENMARK

9113Bx Installation:

Hazardous area
Zone 0,1,2, 20, 21, 22

Non Hazardous area
or Zone 2

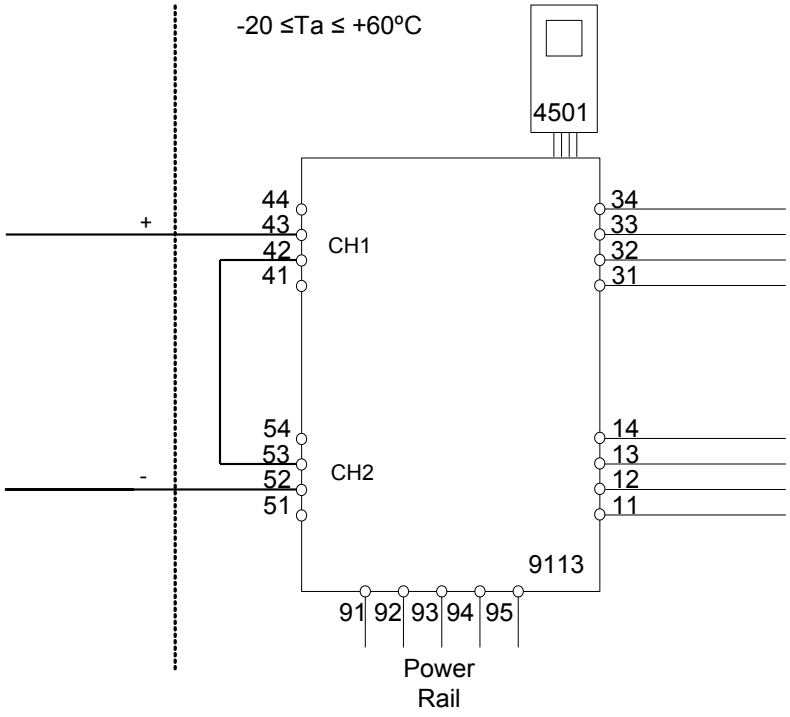

Ex input
CH1 (terminal 43 +)
CH2 (terminal 52 -)

U_o:	17.4 V
I_o:	18.4 mA
P_o:	80 mW
Lo/Ro	445 µH/Ω

	IIC	IIB	IIA
C_o.	0.3 µF	1.6 µF	8 µF
L_o.	80 mH	250 mH	600 mH

U_i:	10 V
I_i:	30 mA
C_i:	15 nF
L_i.	1.7 µH

U_m: 253 V max. 400 Hz

Supply / Output:
(terminal 11,12,13,14)
(terminal 31,32,33,34)
(terminal 91,92,93,94,95)

LERBAKKEN 10, 8410 RØNDE DENMARK

9113Ax Installation:

Non Hazardous area or Zone 2

-20 ≤ Ta ≤ 60ºC

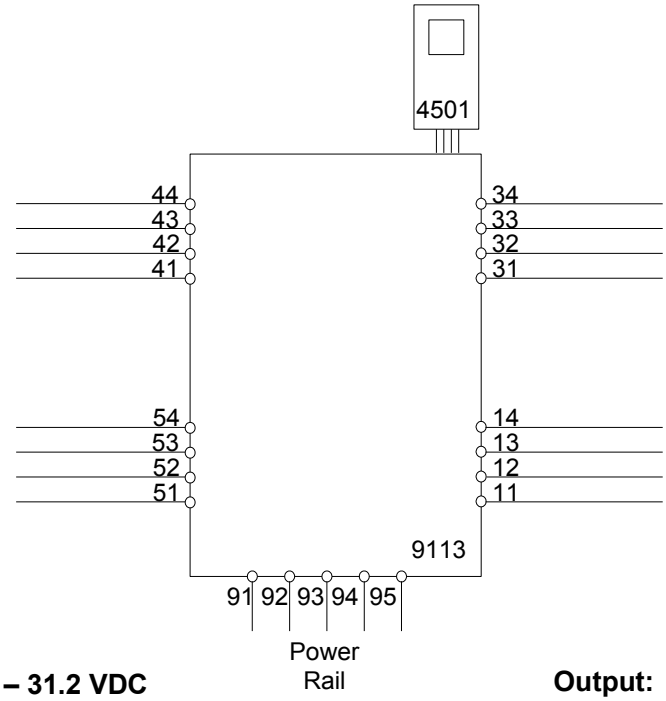

Supply: 19.2 – 31.2 VDC
(terminal 31,32)
(terminal 91,92,93,94,95)

Output:
(terminal 11,12,13,14)

Input
CH1 (terminal 41,42,43,44)
CH2 (terminal 51,52,53,54)

Status Relay. terminal (33,34)		Zone 2 Installation
Voltage max.:	125 VAC / 110 VDC	32 VAC / 32 VDC
Power max.:	62,5 VA / 32 W	16 VA / 32 W
Current max.:	0.5 AAC / 0.3 ADC	0.5 AAC / 1 ADC

For installation in Zone 2, the module shall be installed in an enclosure in type of protection Ex n or Ex e, providing a degree of protection of at least IP54. Cable entry devices and blanking elements shall fulfill the same requirements.

For installation on Power Rail in Zone 2, only Power Rail type 9400 supplied by Power Control Unit type 9410 (Type Examination Certificate IECEx KEM 08.0025X) is allowed.

For Installation in Zone 2 the following must be observed.
The 4501 programming module is to be used solely with PRelectronics modules. It is important that the module is undamaged and has not been altered or modified in any way. Only 4501 modules free of dust and moisture shall be installed.

LERBAKKEN 10, 8410 RØNDE DENMARK

ATEX/UKEX Installation drawing 9113QA01 V7R1

For safe installation of 9113 the following must be observed. The module shall only be installed by qualified personnel who are familiar with the national and international laws, directives and standards that apply to this area.
Year of manufacture can be taken from the first two digits in the serial number.

For Installation in Zone 2 the following must be observed.
The 4501 programming module is to be used solely with PR electronics modules. It is important that the module is undamaged and has not been altered or modified in any way. Only 4501 modules free of dust and moisture shall be installed.

ATEX Certificate:	KEMA 07ATEX 0148X
UKEX Certificate, 9113Bx	DEKRA 23UKEX0109X
UKEX Certificate, 9113Ax, 9113Bx:	DEKRA 21UKEX0175X
Marking 9113Bx:	II (1) G [Ex ia Ga] IIC/IIB/IIA II (1) D [Ex ia Da] IIIC I (M1) [Ex ia Ma] I
Marking 9113Bxx, 9113Axx:	II 3 G Ex ec nC IIC T4 Gc
Standards	EN 60079-0 : 2018, EN 60079-11 : 2012, EN 60079-15 : 2019, EN60079-7:2015+A1:2018

Supply terminal (31,32)

Voltage : 19.2 – 31.2 VDC

Status Relay. terminal (33,34)		**Zone 2 Installation**
Voltage max:	125 VAC / 110 VDC	32 VAC / 32 VDC
Power max:	62.5 VA / 32 W	16 VA / 32 W
Current max:	0.5 AAC / 0.3 ADC	0.5 AAC / 1 ADC

Specific Conditions of Use

Install in pollution degree 2, overvoltage category II as defined in EN60664-1.

Do not separate connectors when energized and an explosive gas mixture is present.
Do not mount or remove modules from the Power Rail when an explosive gas mixture is present.
Disconnect power before servicing.
The wiring of unused terminals is not allowed.

In type of protection [Ex ia Da] the parameters for intrinsic safety for gas group IIB are applicable.

For installation in Zone 2, the module shall be installed in an enclosure in type of protection Ex e, providing a degree of protection of at least IP54. Cable entry devices and blanking elements shall fulfill the same requirements.

For installation on Power Rail in Zone 2, only Power Rail type 9400 supplied by Power Control Unit type 9410 (Type Examination Certificate KEMA 07ATEX0152 X, DEKRA 21UKEX0169 X) is allowed.

Max. screw terminal torque 0.5 Nm.

Stranded wire should be installed with an insulation stripping length of 5 mm or via a suitable insulated terminal such as a bootlace ferrule.

LERBAKKEN 10, 8410 RØNDE DENMARK

9113Bx Installation:

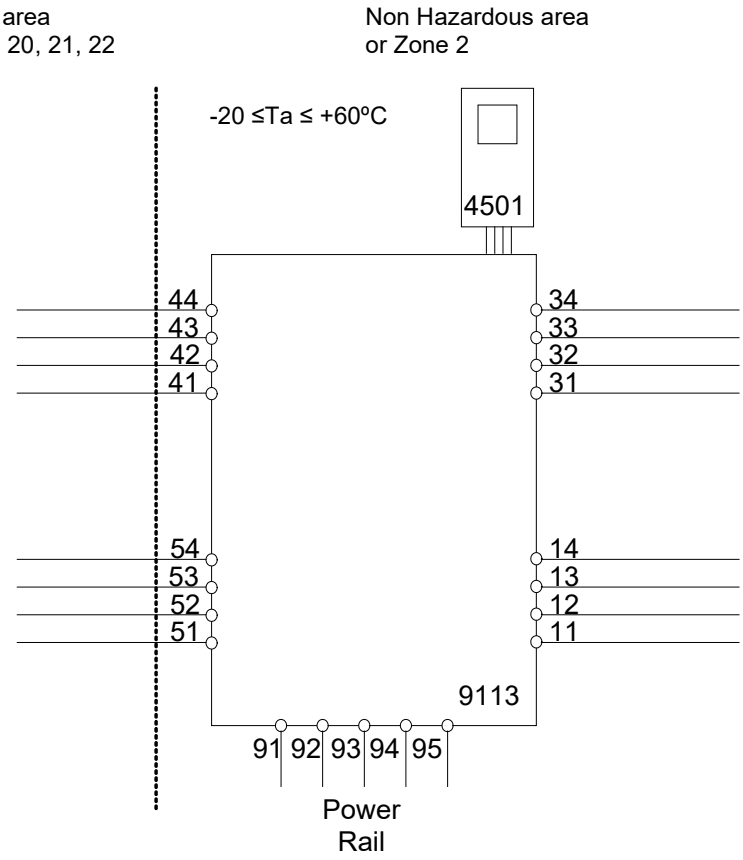

Ex input
CH1 (terminal 41,42,43,44)
CH2 (terminal 51,52,53,54)

U_o: 8.7 V
I_o: 18.4 mA
P_o: 40 mW
Lo/Ro 892 µH/Ω

	IIC	IIB	IIA or I
C_o.	5 µF	50 µF	1000 µF
L_o.	100 mH	300 mH	700 mH

U_i: 10 V
I_i: 30 mA
C_i: 30 nF
L_i. 820 nH

U_m: 253 V max. 400 Hz

Supply / Output:
(terminal 11,12,13,14)
(terminal 31,32,33,34)
(terminal 91,92,93,94,95)

LERBAKKEN 10, 8410 RØNDE DENMARK

9113Bx Installation:

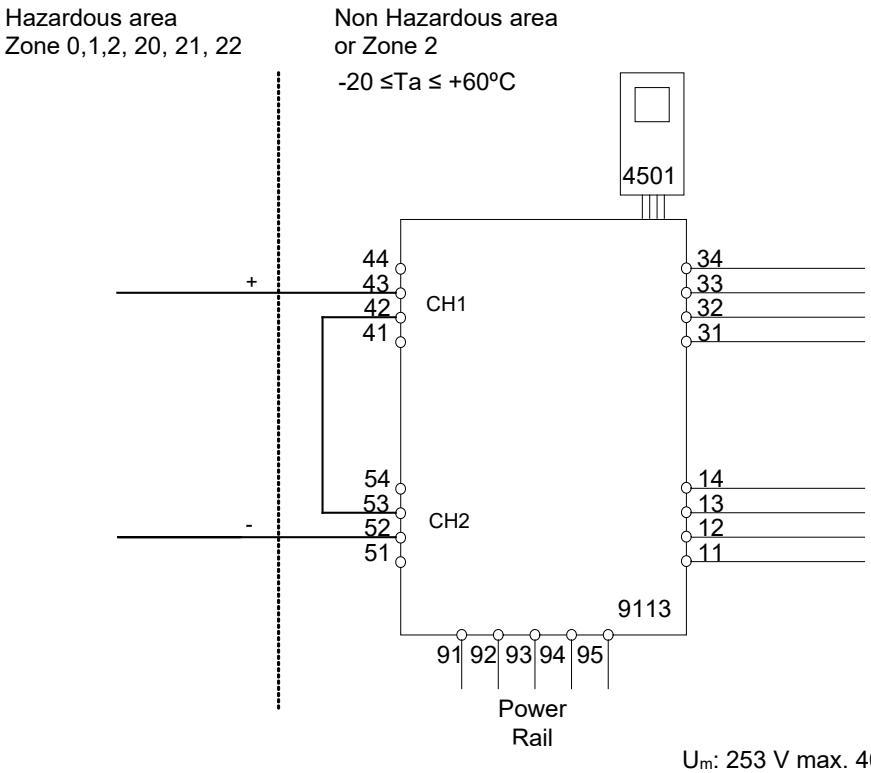

U_m: 253 V max. 400 Hz

Ex input
CH1 (terminal 43)
CH2 (terminal 52)

U_o:	17,4 V
I_o:	18.4 mA
P_o:	80 mW
Lo/Ro	445 µH/Ω

	IIC	IIB	IIA or I
C_o.	0.3 µF	1.6 µF	8 µF
L_o.	80 mH	250 mH	600 mH

U_i:	10 V
I_i:	30 mA
C_i:	15 nF
L_i.	1.7 µH

Supply / Output:
(terminal 11,12,13,14)
(terminal 31,32,33,34)
(terminal 91,92,93,94,95)

LERBAKKEN 10, 8410 RØNDE DENMARK

9113Ax Installation:

Non Hazardous area or Zone 2

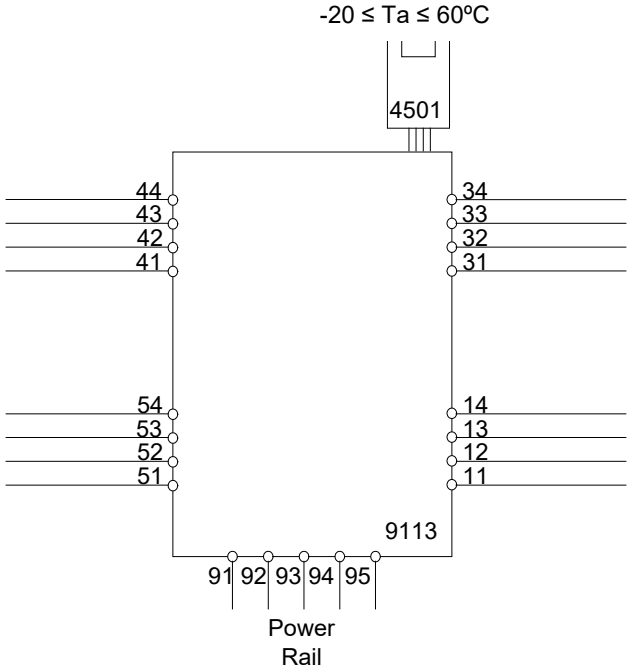

Supply: 19.2 – 31.2 VDC
(terminal 31,32)
(terminal 91,92,93,94,95)

Output:
(terminal 11,12,13,14)

Input
CH1 (terminal 41,42,43,44)
CH2 (terminal 51,52,53,54)

Status Relay. terminal (33,34)		Zone 2 Installation
Voltage max:	125VAC / 110VDC	32VAC / 32VDC
Power max:	62,5VA / 32W	16VA / 32W
Current max:	0.5A AC / 0.3ADC	0.5A AC / 1ADC

For installation in Zone 2, the module shall be installed in an enclosure in type of protection Ex e, providing a degree of protection of at least IP54. Cable entry devices and blanking elements shall fulfill the same requirements.

For installation on Power Rail in Zone 2, only Power Rail type 9400 supplied by Power Control Unit type 9410 (Type Examination Certificate KEMA 07ATEX0152 X, DEKRA 21UKEX0169 X) is allowed.

For Installation in Zone 2 the following must be observed. The 4501 programming module is to be used solely with PRelectronics modules. It is important that the module is undamaged and has not been altered or modified in any way. Only 4501 modules free of dust and moisture shall be installed.

LERBAKKEN 10, 8410 RØNDE DENMARK

FM Installation drawing

9113
For safe installation of 9113B the following must be observed. The module shall only be installed by qualified personnel who are familiar with the national and international laws, directives and standards that apply to this area.
Year of manufacture can be taken from the first two digits in the serial number.

4501
For Installation in Zone 2 / Division 2 the following must be observed.
The 4501 programming module is to be used solely with PR electronics modules. It is important that the module is undamaged and has not been altered or modified in any way.
Only 4501 modules free of dust and moisture shall be installed.

Hazardous Classified Location
Class I/II/III, Division 1, Group A,B,C,D,E,F,G
or Class I, Zone 0/1 Group IIC, [AEx ia] IIC
or Group IIC, [Ex ia Ga] IIC Gc

Unclassified Location or
Hazardous Classified Location
Class I, Division 2, Group A,B,C,D T4
or Class I Zone 2 Group IIC T4 Gc

Intrinsically safe apparatus entity parameters:

Vmax (Ui) ≥ Vt (Uo)
Imax (Ii) ≥ It (Io)
Pi ≥ Po
Ca ≥ C_{cable} + Ci
La ≥ L_{cable} + Li
The sum of capacitance and inductance of cable and intrinsic safe equipment must be less or equal to Ca and La

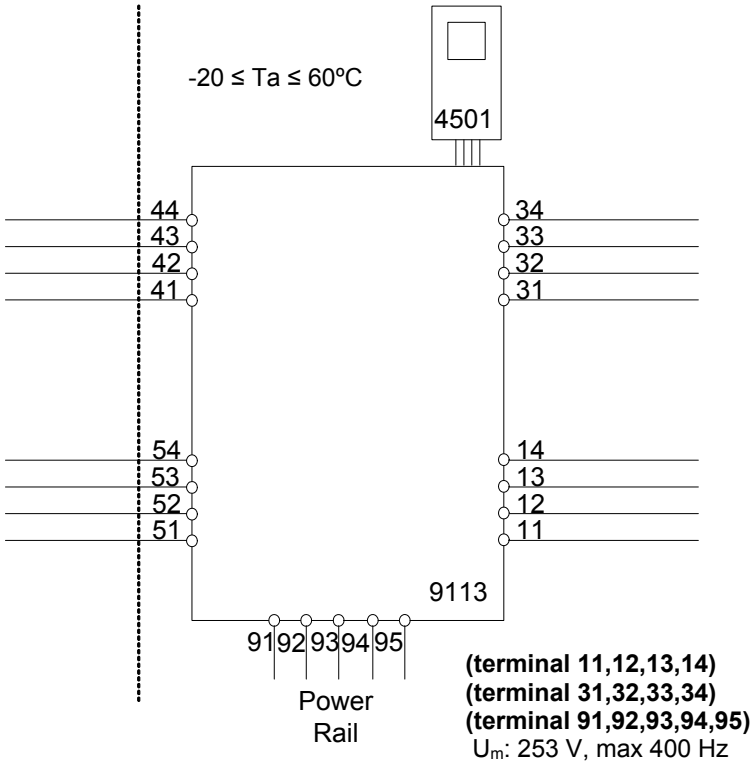

LERBAKKEN 10, 8410 RØNDE DENMARK

Ex input
CH1 (terminal 41,42,43,44)
CH2 (terminal 51,52,53,54)

Vt (U_o):	8.7 V
It (I_o):	18.4 mA
P_o:	40 mW
Lo/Ro	892 µH/Ω

	IIC / Group A,B	IIB / Group C,E,F	IIA / Group D,G
C_a / C_o.	5 µF	50 µF	1000 µF
L_a / L_o.	100 mH	300 mH	700 mH

U_i:	10 V
I_i:	30 mA
C_i:	30 nF
L_i.	820 nH

Status Relay. terminal (33,34)

Voltage max:	125 VAC / 110 VDC
Power max:	62,5 VA / 32 W
Current max:	0.5 A AC / 0.3 ADC

Zone 2 installation:

Voltage max:	32 VAC / 32 VDC
Power max:	16 VA / 32 W
Current max:	0.5 A AC / 1 ADC

Installation notes:
In Class I, Division 2 installations, the subject equipment shall be mounted within a tool-secured enclosure which is capable of accepting one or more of the Class I, Division 2 wiring methods specified in the National Electrical Code (ANSI/NFPA 70) or the Canadian Electrical Code (C22.1).
In Class I, Zone 2 installations, the subject equipment shall be mounted within a tool-secured enclosure which is capable of accepting one or more of the Class I, Zone 2 wiring methods specified in the National Electrical Code (ANSI/NFPA 70) or the Canadian Electrical Code (C22.1). Where installed in outdoor or potentially wet locations, the enclosure shall, at a minimum, meet the requirements of IP54.
In Class I, Zone 2 installations, the installer shall ensure protection of supply terminals against transient voltages exceeding 140% of the rated supply voltage.

Install in environments rated Pollution Degree 2 or better; overvoltage category I or II.
The module must be supplied from a Power Supply having double or reinforced insulation.
The use of stranded wires is not permitted for mains wiring except when wires are fitted with cable ends.
For installation on the 9400 Power Rail the power must be supplied from Power Control Module Unit 9410.
The module is galvanic isolated and does not require grounding.
Use 60 / 75 ºC Copper Conductors with wire Size AWG: (26-14).
Warning: Substitution of components may impair intrinsic safety.

LERBAKKEN 10, 8410 RØNDE DENMARK

Warning: To prevent ignition of the explosive atmospheres, disconnect power before servicing and do not separate connectors when energized and an explosive gas mixture is present.

Hazardous Classified Location
Class I/II/III, Division 1, Group A,B,C,D,E,F,G
or Class I, Zone 0/1 Group IIC, [AEx ia] IIC
or Group IIC, [Ex ia Ga] IIC Gc

Unclassified Location or
Hazardous Classified Location
Class I, Division 2, Group A,B,C,D T4
or Class I Zone 2 Group IIC T4 Gc

Intrinsically safe apparatus entity parameters:

Vmax (Ui) ≥ Vt (Uo)
Imax (Ii) ≥ It (Io)
Pi ≥ Po
Ca ≥ C_{cable} + Ci
La ≥ L_{cable} + Li
The sum of capacitance and inductance of cable and intrinsic safe equipment must be less or equal to Ca and La

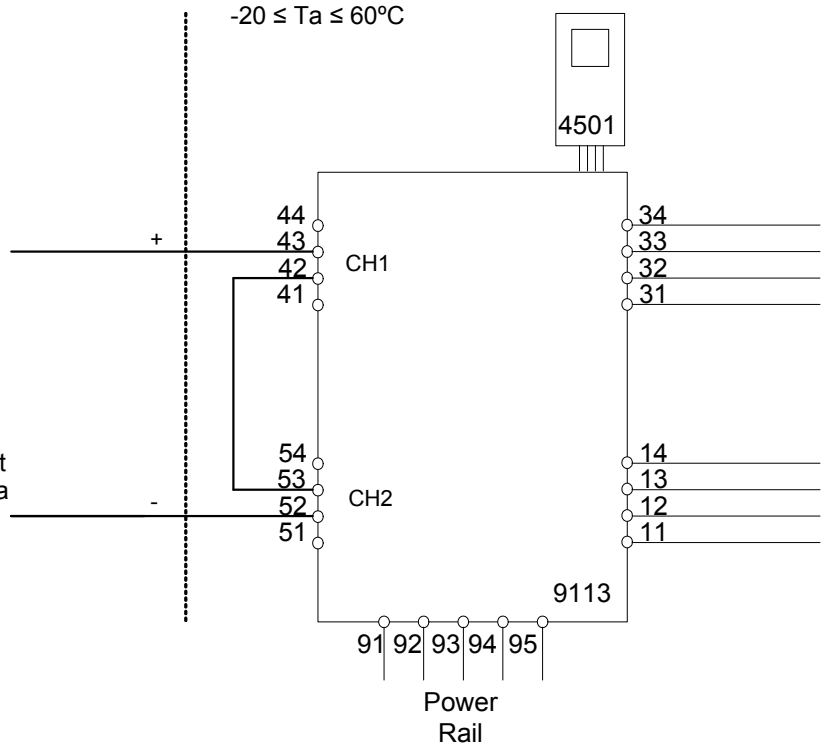

Ex input
CH1 (terminal 42,43)
CH2 (terminal 52,53)
Vt (U_o): 17.4 V
It (I_o): 18.4 mA
P_o: 80 mW
Lo/Ro 445 µH/Ω

(terminal 11,12,13,14)
(terminal 31,32,33,34)
(terminal 91,92,93,94,95)
U_m: 253 V, max 400 Hz

	IIC / Group A,B	IIB / Group C,E,F	IIA / Group D,G
C_a / C_o.	0.3 µF	1.6 µF	8 µF
L_a / L_o.	80 mH	250 mH	600 mH

U_i: 10 V
I_i: 30 mA
C_i: 15 nF
L_i. 1.7 µH

LERBAKKEN 10, 8410 RØNDE DENMARK

INMETRO Desenhos para Instalação

Para instalação segura do 9113B. e 9113A. o manual seguinte deve ser observado. O módulo deve ser instalado somente por profissionais qualificados que estão familiarizados com as leis nacionais e internacionais, diretrizes e normas que se aplicam a esta área. Ano de fabricação pode ser obtido a partir dos dois primeiros dígitos do número de série.

4501
Para a instalação na Zona 2 o seguinte deve ser observado. O módulo de programação de 4501 deve ser utilizado apenas com os módulos PR electronics. É importante que o módulo esteja intacto e não tenha sido alterado ou modificado de qualquer maneira. Apenas os módulos 4501 livres de poeira e umidade devem ser instalados.

INMETRO Certificado …… DEKRA 23.0005X

Marcas: 9113B.
[Ex ia Ga] IIC/IIB/IIA
[Ex ia Da] IIIC
[Ex ia Ma] I

Marcas: 9113B., 9113A. Ex ec nC IIC T4 Gc

Normas:
ABNT NBR IEC 60079-0:2020 Versão Corrigida:2023
ABNT NBR IEC 60079-7:2018 Versão Corrigida:2022
ABNT NBR IEC 60079-11:2013 Versão Corrigida:2017
ABNT NBR IEC 60079-15:2019

Terminal de fonte de alimentação (31,32)

Voltagem: 19,2 – 31,2 VDC

Relê de Estado terminais (33,34)

Voltagem máx.: 125 VAC / 110 VDC
Potência máx.: 62,5 VA / 32 W
Corrente máx.: 0,5 A AC / 0,3 ADC

Instalação Zone 2:
Voltagem máx.: 32 VAC / 32 VDC
Potência máx.: 16 VA / 32 W
Corrente máx.: 0,5 A AC / 1 ADC

Notas de Instalação:

Instalação em grau de poluição 2, categoria de sobretensão II conforme definido no IEC 60664-1. Os circuitos não intrinsecamente seguros só pode ser connectado para sobretensão limitado ao categoria I/II como definido na IEC 60664-1.

Não separe conectores quando energizado ou quando uma mistura de gás explosivo estiver presente.

Não monte ou remova módulos do trilho de alimentação quando uma mistura explosiva de gás estiver presente.

LERBAKKEN 10, 8410 RØNDE DENMARK

Desligue a alimentação antes da manutenção.
A fiação de terminais sem uso não é permitida.
A fonte de Loop e terminais de entrada de corrente para o mesmo canal não deve ser aplicada ao mesmo tempo.

Em tipo de proteção [Ex ia Da] os parâmetros para a segurança intrínseca para grupo de gás IIB são aplicáveis.

Para a instalação em Zona 2, o módulo deve ser instalado em um invólucro conformidade com o tipo de proteção ‘Ex e’, fornecendo no mínimo grau de proteçao IP54.

Dispositivos de entrada de cabo e elementos de vedação devem cumprir com os mesmos requisitos.

Para a instalação de trilho de energia na Zona 2, apenas o trilho de alimentação Rail 9400 fornecido pela Unidade de Controle de Potência 9410 é permitido.

Máx. torque terminal de parafuso 0,5 Nm. O fio trançado deve ser instalado com um comprimentode isolamento de 5 mm ou através de um terminal isolado adequado, como um terminal de cadarço.

LERBAKKEN 10, 8410 RØNDE DENMARK

Instalação 9113B. 2 Circuitos

Área de classificada
Zona 0,1,2, 20, 21, 22

Área de nao classificada
ou Zona 2

-20 ≤Ta ≤ +60ºC

(terminais 11,12,13,14)
(terminais 31,32,33,34)
(terminais91,92,93,94,95)
U_m: 253 V, máx. 400 Hz

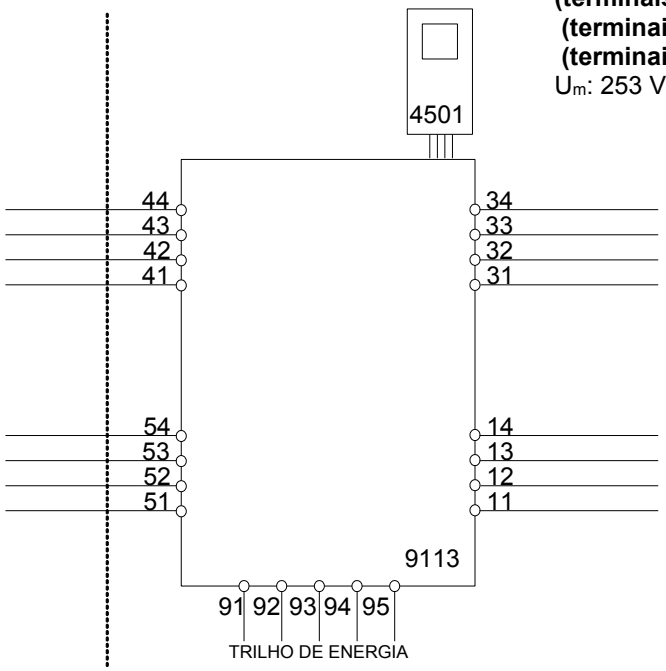

entrada Ex
CN1 (terminais 41,42,43,44)
CN2 (terminais 51,52,53,54)

U_o: 8,7 V
I_o: 18,4 mA
P_o: 40 mW
Lo/Ro 892 µH/Ω

	IIC	IIB	IIA	I
C_o.	5 µF	50 µF	1000 µF	1000 µF
L_o.	100 mH	300 mH	700 mH	700 mH

U_i: 10 V
I_i: 30 mA
C_i: 30 nF
L_i. 820 nH

LERBAKKEN 10, 8410 RØNDE DENMARK

Instalação 9113B. 2 Circuitos combinado

Área de classificada
Zona 0,1,2, 20, 21, 22

Área de nao classificada
ou Zona 2

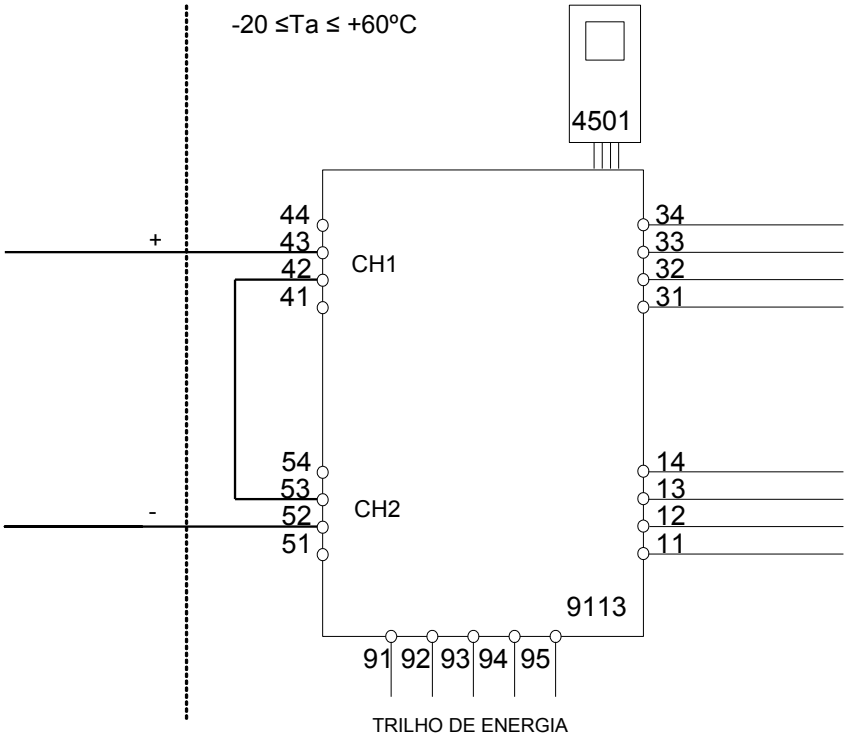

entrada EX
CN1 (terminais 43 +) **(terminais 11,12,13,14)**
CN2 (terminais 52 -) **(terminais 31,32,33,34)**
(terminais 91,92,93,94,95)

U_o: 17,4 V
I_o: 18,4 mA
P_o: 80 mW
Lo/Ro 445 µH/Ω

U_m: 253 V, máx. 400 Hz

	IIC	IIB	IIA	I
C_o.	0,3 µF	1,6 µF	8 µF	8 µF
L_o.	80 mH	250 mH	600 mH	600 mH

U_i: 10 V
I_i: 30 mA
C_i: 15 nF
L_i. 1,7 µH

LERBAKKEN 10, 8410 RØNDE DENMARK

Instalação 9113A.:

Área de não Risco
ou Zona 2

-20 ≤ Ta ≤ 60ºC

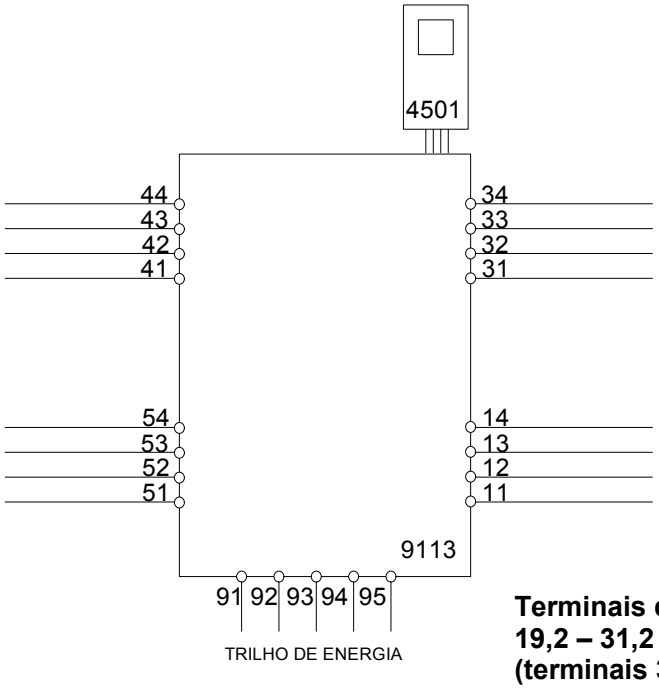

Terminais de alimentação:
19,2 – 31,2 VDC
(terminais 31,32)
(terminais 91,92,93,94,95)

Input
CN1 (terminais 41,42,43,44)
CN2 (terminais 51,52,53,54)

Saida:
(terminais 11,12,13,14)

Para a instalação em Zona 2, o módulo deve ser instalado em um invólucro conformidade com o tipo de proteção ‘Ex e’, fornecendo no mínimo grau de proteçao IP54. Dispositivos de entrada de cabo e elementos de vedação devem cumprir com os mesmos requisitos.

Para a instalação de trilho de energia na Zona 2, apenas o trilho de alimentação Rail 9400 fornecido pela Unidade de Controle de Potência 9410 é permitido.

Máx. torque terminal de parafuso 0,5 Nm. O fio trançado deve ser instalado com um comprimento de isolamento de 5 mm ou através de um terminal isolado adequado, como um terminal de cadarço.

Document history

The following list provides notes concerning revisions of this document.

Rev. ID	Date	Notes
107	1848	Release of the 9113xx-EMP version.
108	1948	9113A-version included in manual. CCOE approval discontinued. New FM certificate and installation drawing.
109	2103	Routing diagram updated.
110	2242	ATEX and IECEx approvals updated - Ex na changed to Ex ec. UKEX approval added.
111	2411	ATEX / UKEX installation drawing updated - UKEX certificate for 9113B-EMP added. INMETRO approval updated - Ex nA replaced by Ex ec.
112	2436	CCC approval added. New EAC Ex certificate.
113	2634	Status relay function clarified.

We are near you, *all over the world*

Our trusted red boxes are supported wherever you are

All our devices are backed by expert service and a 5-year warranty. With each product you purchase, you receive personal technical support and guidance, day-to-day delivery, repair without charge within the warranty period and easily accessible documentation.

We are headquartered in Denmark, and have offices and authorized partners the world over. We are a local business with a global reach. This means that we are always nearby and know your local markets well.
We are committed to your satisfaction and provide PERFORMANCE MADE SMARTER all around the world.

For more information on our warranty program, or to meet with a sales representative in your region, visit prelectronics.com.

Benefit today from
PERFORMANCE MADE SMARTER

PR electronics is the leading technology company specialized in making industrial process control safer, more reliable and more efficient. Since 1974, we have been dedicated to perfecting our core competence of innovating high precision technology with low power consumption. This dedication continues to set new standards for products communicating, monitoring and connecting our customers' process measurement points to their process control systems.

Our innovative, patented technologies are derived from our extensive R&D facilities and from having a great understanding of our customers' needs and processes. We are guided by principles of simplicity, focus, courage and excellence, enabling some of the world's greatest companies to achieve PERFORMANCE MADE SMARTER.