PERFORMANCE
MADE
SMARTER

Product manual
9116-EMP
Universal converter, EMPHASIS-assessed

TEMPERATURE | I.S. INTERFACES | COMMUNICATION INTERFACES | MULTIFUNCTIONAL | ISOLATION | DISPLAY

No. 9116-EMPV113-UK
From serial no.: 261605729

PR electronics

6 Product Pillars
to meet your every need

Individually outstanding, unrivalled in combination

With our innovative, patented technologies, we make signal conditioning smarter and simpler. Our portfolio is composed of six product areas, where we offer a wide range of analog and digital devices covering over a thousand applications in industrial and factory automation. All our products comply with or surpass the highest industry standards, ensuring reliability in even the harshest of environments and have a 5-year warranty for greater peace of mind.

Temperature

Our range of temperature transmitters and sensors provides the highest level of signal integrity from the measurement point to your control system. You can convert industrial process temperature signals to analog, bus or digital communications using a highly reliable point-to-point solution with a fast response time, automatic self-calibration, sensor error detection, low drift, and top EMC performance in any environment.

I.S. Interface

We deliver the safest signals by validating our products against the toughest safety standards. Through our commitment to innovation, we have made pioneering achievements in developing I.S. interfaces with SIL 2 Full Assessment that are both efficient and cost-effective. Our comprehensive range of analog and digital intrinsically safe isolation barriers offers multifunctional inputs and outputs, making PR an easy-to-implement site standard. Our backplanes further simplify large installations and provide seamless integration to standard DCS systems.

Communication

We provide inexpensive, easy-to-use, future-ready communication interfaces that can access your PR installed base of products. All the interfaces are detachable, have a built-in display for readout of process values and diagnostics, and can be configured via push-buttons. Product specific functionality includes communication via Modbus and Bluetooth and remote access using our PR Process Supervisor (PPS) application, available for iOS and Android.

Multifunction

Our unique range of single devices covering multiple applications is easily deployable as your site standard. Having one variant that applies to a broad range of applications can reduce your installation time and training, and greatly simplify spare parts management at your facilities. Our devices are designed for long-term signal accuracy, low power consumption, immunity to electrical noise and simple programming.

Isolation

Our compact, fast, high-quality 6 mm isolators are based on microprocessor technology to provide exceptional performance and EMC-immunity for dedicated applications at a very low total cost of ownership. They can be stacked both vertically and horizontally with no air gap separation between units required.

Display

Our display range is characterized by its flexibility and stability. The devices meet nearly every demand for display readout of process signals and have universal input and power supply capabilities. They provide a real-time measurement of your process value no matter the industry and are engineered to provide a user-friendly and reliable relay of information, even in demanding environments.

Universal converter, EMPHASIS-assessed 9116-EMP

Table of contents

Warning . . . 4
Symbol identification . . . 4
Safety instructions . . . 4
Marking . . . 5
How to demount system 9000 . . . 6
Mounting the PR 4500 communication interfaces . . . 6
Advanced features . . . 7
Application . . . 7
Technical characteristics . . . 7
Applications - 9116Ax-EMP . . . 8
Applications - 9116Bx-EMP . . . 9
Order . . . 10
Accessories . . . 10
Electrical specifications . . . 10
Configuration of sensor error check . . . 15
  Input signal outside range . . . 15
  Sensor error detection . . . 15
Error indications . . . 16
Connections . . . 17
Block diagram . . . 18
Signal error and cable fault indications without display front . . . 19
Configuration / operating the function keys . . . 20
Routing diagram . . . 23
Routing diagram, advanced settings (ADV.SET) . . . 25
Help text overview . . . 26
Graphic depiction of window . . . 28
Graphic depiction of setpoint . . . 29
IECEx Installation Drawing . . . 30
ATEX / UKEX Installation Drawing . . . 35
FM Installation Drawing . . . 40
Desenho de instalaçao INMETRO . . . 44
Document history . . . 49

Warning

The following operations should only be carried out on a disconnected device and under ESD-safe conditions:

General mounting, wire connection and disconnection.
Troubleshooting the device.

Repair of the device and replacement of circuit breakers must be done by PR electronics A/S only.

Warning

Do not open the front plate of the device as this will cause damage to the connector for the display / programming front PR 4500.
This device contains no DIP-switches or jumpers.

Symbol identification

Triangle with an exclamation mark: Warning/demand. Potentially lethal situations. Read the manual before installation and commissioning of the device in order to avoid incidents that could lead to personal injury or mechanical damage.

The CE mark proves the compliance of the device with the essential requirements of the EU-directives.

The UKCA mark proves the compliance of the device with the essential requirements of the UK regulations.

The double insulation symbol shows that the device is protected by double or reinforced insulation.

Ex devices have been approved acc. to the ATEX directive for use in connection with installations in explosive areas. See installation drawings in appendix.

Safety instructions

Definitions

Hazardous voltages have been defined as the ranges: 75 to 1500 Volt DC, and 50 to 1000 Volt AC.
Technicians are qualified persons educated or trained to mount, operate, and also trouble-shoot technically correct and in accordance with safety regulations.
Operators, being familiar with the contents of this manual, adjust and operate the knobs or potentiometers during normal operation.

Receipt and unpacking

Unpack the device without damaging it and check whether the device type corresponds to the one ordered. The packing should always follow the device until this has been permanently mounted.

Environment

Avoid direct sun light, dust, high temperatures, mechanical vibrations and shock, and rain and heavy moisture. If necessary, heating in excess of the stated limits for ambient temperatures should be avoided by way of ventilation.
The device must be installed in pollution degree 2 or better.
The device is designed to be safe at least under an altitude up to 2 000 m.
The device is designed for indoor use.

Mounting

Only technicians, who are familiar with the technical terms, warnings, and instructions in the manual and who are able to follow these, should connect the device. Should there be any doubt as to the correct handling of the device, please contact your local distributor or, alternatively,

PR electronics A/S
www.prelectronics.com

The use of stranded wires is not permitted for mains wiring except when wires are fitted with cable ends.

Stranded wire should be installed with an insulation stripping length of 5 mm or via a suitable insulated terminal such as a bootlace ferrule.

Descriptions of input / output and supply connections are shown in the block diagram and on the side label.

The device must be supplied from a Power Supply with electrical protection feature SELV or otherwise confirmed to have double or reinforced insulation. A power switch shall be easily accessible and close to the device. The power switch shall be marked as the disconnecting unit for the device.

For installation on Power Rail 9400 the power is supplied by Power Control Unit 9410.

Year of manufacture can be taken from the first two digits in the serial number.

Calibration and adjustment

During calibration and adjustment, the measuring and connection of external voltages must be carried out according to the specifications of this manual. The technician must use tools and instruments that are safe to use.

Normal operation

Operators are only allowed to adjust and operate devices that are safely fixed in panels, etc., thus avoiding the danger of personal injury and damage. This means there is no electrical shock hazard, and the device is easily accessible.

Cleaning

When disconnected, the device may be cleaned with a cloth moistened with distilled water.

Liability

To the extent the instructions in this manual are not strictly observed, the customer cannot advance a demand against PR electronics A/S that would otherwise exist according to the concluded sales agreement.

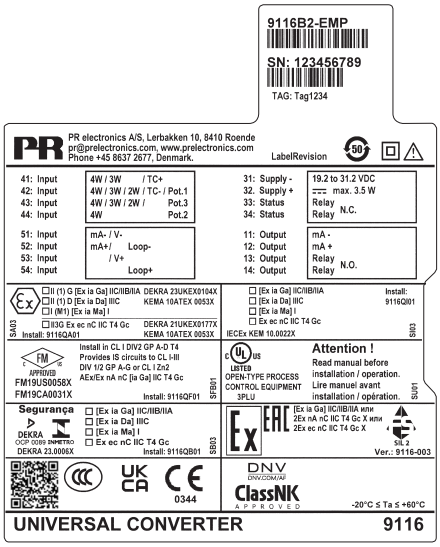

Marking

When this product has been installed as Ex ia or / and ec, use a permanent marker in the appropriate box to indicate the type of installation on the label.

How to demount system 9000

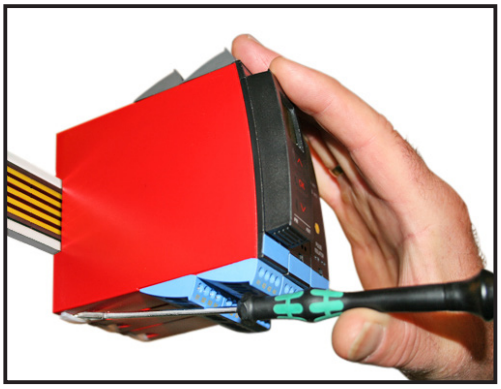

Picture 1:
By lifting the bottom lock, the device is detached from the DIN rail.

Mounting the PR 4500 communication interfaces

1: Insert the tabs of the PR 4500 into the slots at the top of the device.
2: Hinge the PR 4500 down until it snaps into place.

Demounting of the PR 4500 communication interfaces

3: Push the release button on the bottom of the PR 4500 and hinge the PR 4500 out and up.
4: With the PR 4500 hinged up, remove from the slots at the top of the device.

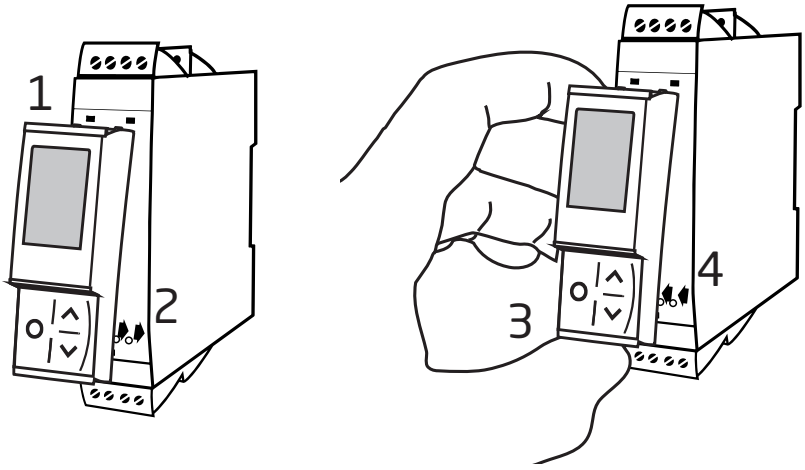

Universal converter, EMPHASIS-assessed
9116-EMP

- Input for RTD, TC, Ohm, potentiometer, mA and V
- Supply for 2-wire transmitters
- Active / passive mA output and relay output
- EMPHASIS-assessed instrument for nuclear industry
- SIL 2-certified via Full Assessment

Advanced features

- Configuration and monitoring by way of detachable display front (PR 4500); process calibration, signal and relay simulation.
- Advanced relay configuration, e.g. setpoint, window, delay, sensor error indication and power monitoring
- Copying of the configuration from one device to others of the same type via the display front.
- Reduced Uo Ex data < 8.3 V for active input signals.
- TC inputs with internal or external CJC for higher accuracy.
- Active / passive mA output via the same two terminals.

Application

- 9116Ax-EMP can be mounted in the safe area or in zone 2 / Class I, Division 2, Groups A, B, C, D.
- 9116Bx-EMP can be mounted in the safe area or in zone 2 / Class 1, Division 2 and receive signals from zone 0, 1, 2 and zone 20, 21, 22 including mining / Class I/II/III, Division 1, Gr. A-G.
- Conversion and scaling of temperature, voltage, potentiometer and linear resistance signals.
- Power supply and signal isolator for 2-wire transmitters.
- Monitoring of error events and cable breakage via the individual status relay and/or a collective electronic signal via the power rail.
- The 9116-EMP has been designed, developed and certified for use in SIL 2 applications according to the requirements of IEC 61508.
- Failure rates for 9116-EMP correspond to Performance Level “d” according to ISO-13849.

Technical characteristics

- 1 green and 1 red front LED indicate operation status and malfunction. 1 yellow LED indicates relay status.
- 2.6 kVAC galvanic isolation between input, output and supply.
- Can be supplied separately or installed on power rail, PR 9400.

Applications - 9116Ax-EMP

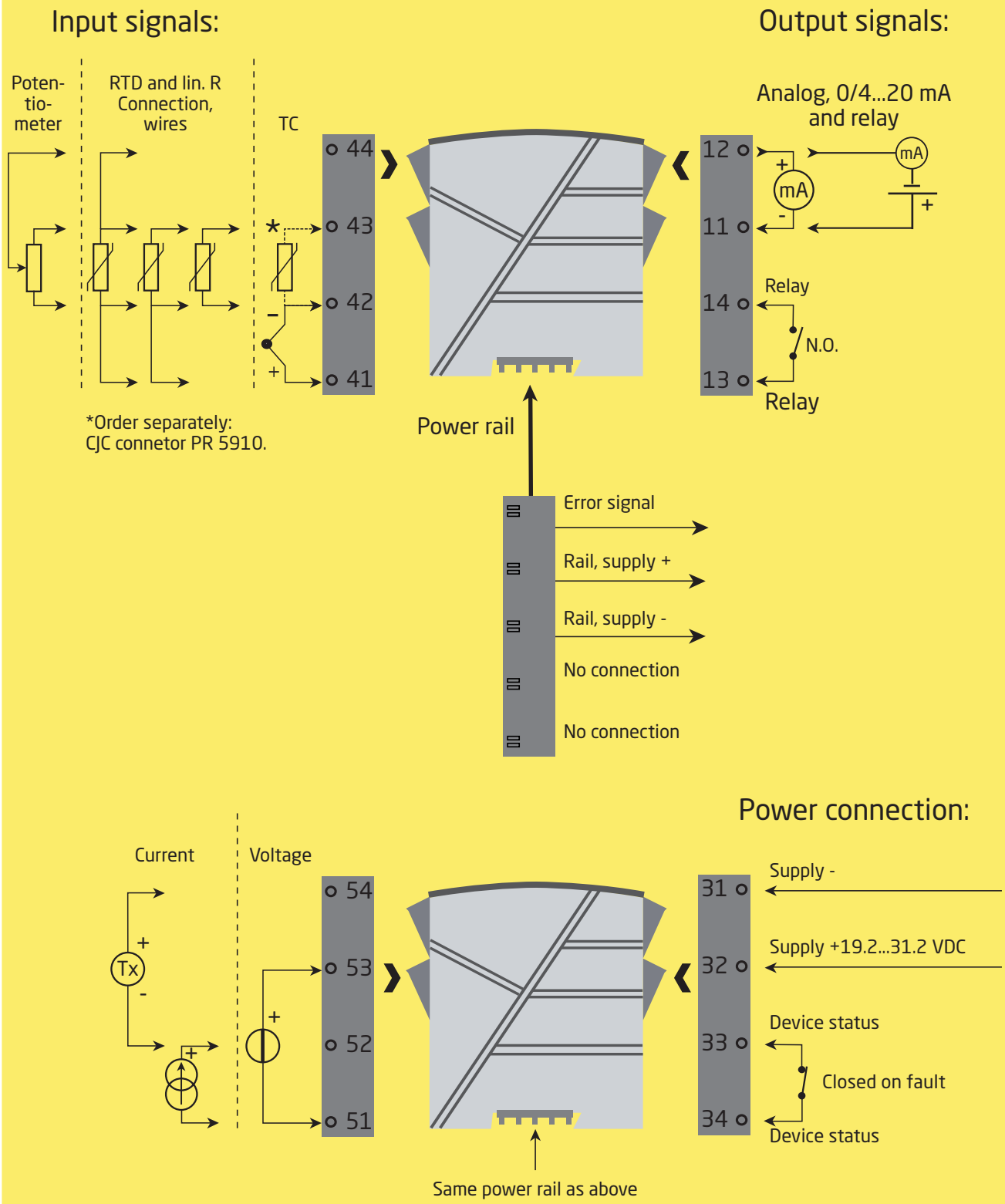

Zone 2 & Cl. 1, Div. 2, gr. A-D
or Safe Area

Applications - 9116Bx-EMP

Input signals:

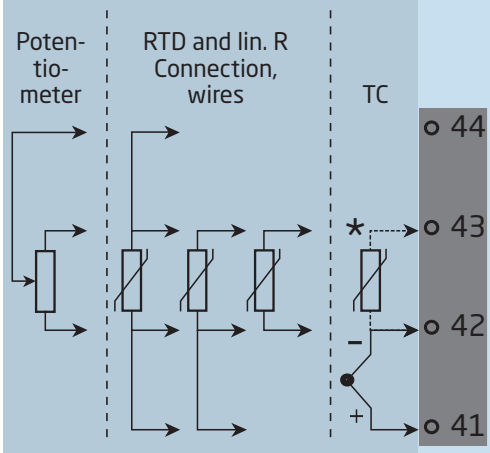

*Order separately:
CJC connetor PR 5910Ex.

Output signals:

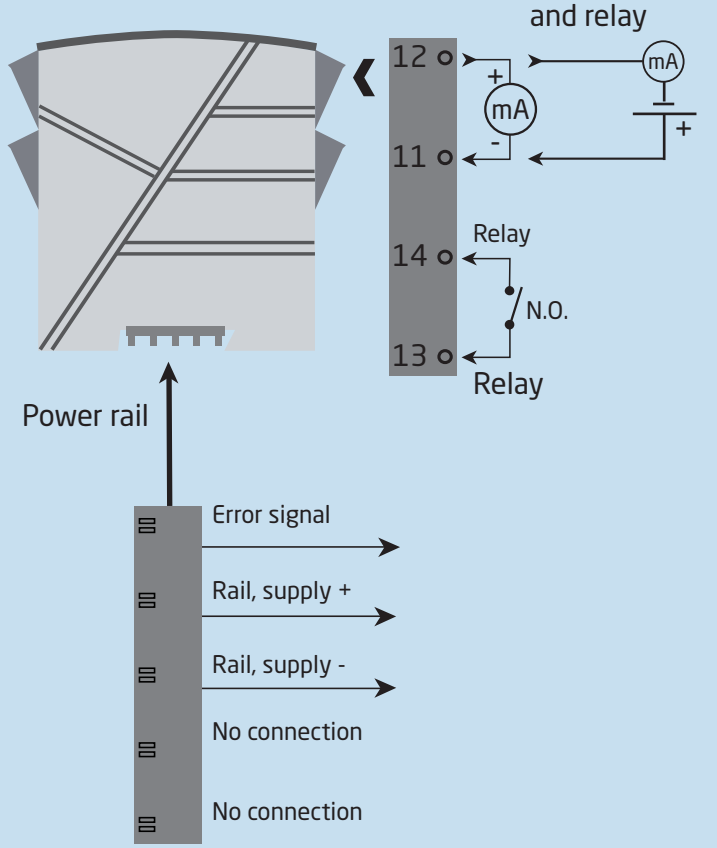

Power connection:

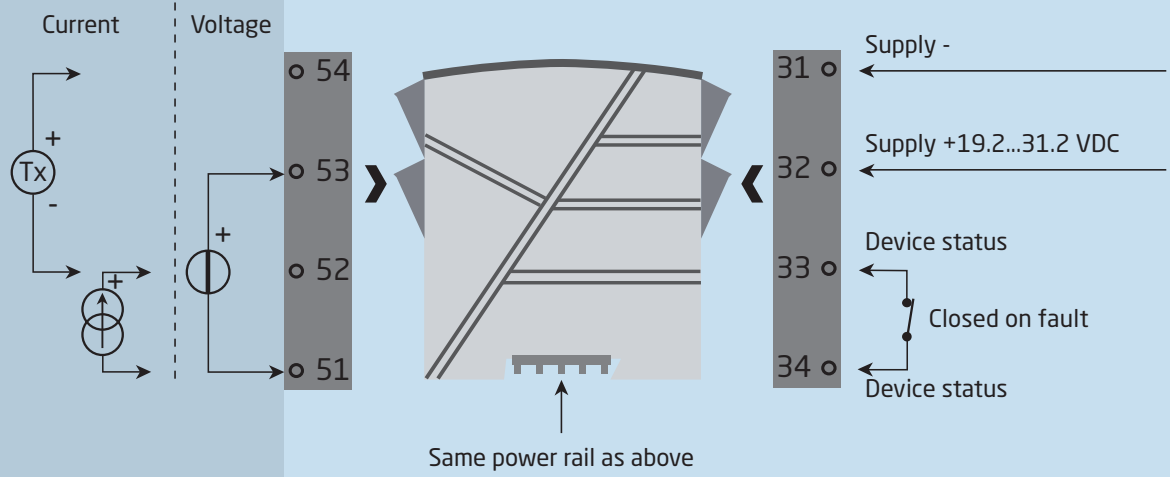

Zone 0, 1, 2, 20, 21, 22, M1 & Cl. I/II/III, Div. 1 gr. A-G

Zone 2 & Cl. 1, Div. 2, gr. A-D or Safe Area

Order

Type	Associated apparatus		Max. loop voltage		EMPHASIS-assessed
9116	No	: A	Uo 28 VDC	: 1	-EMP
	Yes	: B	Uo 21.4 VDC	: 2	

Example: 9116B2-EMP

Accessories

4510 = Display / programming front
4511 = Modbus communication enabler
4512 = Bluetooth communication enabler
5910 = CJC connector for 9116Ax-EMP
5910Ex = CJC connector for 9116Bx-EMP
9400 = Power rail
9404 = Module stop for rail
9410 = Power control unit
9421 = Power supply 24 V - Ex ec nC

Electrical specifications

Environmental conditions

Operating temperature . . . . . -20°C to +60°C
Storage temperature . . . . . -20°C to +85°C
Calibration temperature . . . . . 20...28°C
Relative humidity . . . . . < 95% RH (non-cond.)
Protection degree IP20
Installation in . . . . . Pollution degree 2 & overvoltage category II.

Mechanical specifications

Dimensions (HxWxD) . . . . . 109 x 23.5 x 104 mm
Dimensions (HxWxD) w/ PR 4500 . . . . . 109 x 23.5 x 131 mm
Weight approx. . . . . 185 g
DIN rail type . . . . . DIN EN 60715 - 35 mm
Wire size . . . . . 0.13...2.08 mm^2 / AWG 26...14 stranded wire
Stripping length . . . . . 5 mm
Screw terminal torque . . . . . 0.5 Nm
Vibration . . . . . IEC 60068-2-6
2...13.2 Hz . . . . . ±1 mm
13.2...100 Hz . . . . . ±0.7 g

Common electrical specifications

Supply voltage . . . . . 19.2...31.2 VDC
Fuse . . . . . 1.25 A SB / 250 VAC

Type	Description	Max. power dissipation	Max. required power
9116x1-EMP	1 channel (Ex Uo 28 V)	≤ 1.7 W	≤ 2.1 W
9116x2-EMP	1 channel (Ex Uo 21.4 V)	≤ 1.7 W	≤ 2.1 W

Max. required power is the maximum power needed at terminals 31 and 32.
Max. power dissipation is the maximum power dissipated by the device.
If the 9116-EMP is used with the PR 4500, then add 40 mW to the max. power dissipation and 70 mW to the max. required power for each device with the PR 4500.

Isolation - test / working:
Input to any . . . . . 2.6 kVAC / 300 VAC reinforced isolation
Analog output to supply . . . . . 2.6 kVAC / 300 VAC reinforced isolation
Output relay to analog output . . . . . 1.5 kVAC / 150 VAC reinforced isolation or 300 VAC basic isolation
Status relay to supply . . . . . 1.5 kVAC / 150 VAC reinforced isolation
Communications interface . . . . . PR 4500
Signal dynamics, input / output . . . . . 24 bit / 16 bit
Signal / noise ratio . . . . . Min. 60 dB (0...100 kHz)
Response time (0...90%, 100...10%):
Temperature input, programmable . . . . . 1...60 s
mA / V input, programmable . . . . . 0.4...60 s
Accuracy, the greater of the general and basic values:

General values		
Input type	Absolute accuracy	Temperature coefficient
All	≤ ±0.1% of span	≤ ±0.01% of span / °C

Basic values		
Input type	Basic accuracy	Temperature coefficient
mA	≤ ±16 µA	≤ ±1.6 µA / °C
Volt	≤ ±20 µV	≤ ±2 µV / °C
Pt100, Pt200, Pt 1000	≤ ±0.2°C	≤ ±0.02°C/°C
Pt500, Ni100, Ni120, Ni 1000	≤ ±0.3°C	≤ ±0.03°C/°C
Pt50, Pt400, Ni50	≤ ±0.4°C	≤ ±0.04°C/°C
Pt250, Pt300	≤ ±0.6°C	≤ ±0.06°C/°C
Pt20	≤ ±0.8°C	≤ ±0.08°C/°C
Pt10	≤ ±1.4°C	≤ ±0.14°C/°C
TC type: E, J, K, L, N, T, U	≤ ±1°C	≤ ±0.1°C/°C
TC type: R, S, W3, W5, LR	≤ ±2°C	≤ ±0.2°C/°C
TC type: B 160...400°C	≤ ±4.5°C	≤ ±0.45°C/°C
TC type: B 400...1820°C	≤ ±2°C	≤ ±0.2°C/°C

EMC - immunity influence. . . . . < ±0.5% of span
Extended EMC immunity:
NAMUR NE 21, A criterion, burst . . . . . < ±1% of span

Auxiliary supplies for 9116x1-EMP:
2-wire supply (terminal 54...52) . . . . . 28...16.5 VDC / 0...20 mA
Auxiliary supplies for 9116x2-EMP:
2-wire supply (terminal 54...52) . . . . . 21.4...16.5 VDC / 0...20 mA

RTD, linear resistance and potentiometer input

Input for RTD types:
Pt10*, Pt20*, Pt50*, Pt100, Pt200, Pt250, Pt300, Pt400, Pt500, Pt1000
Ni50, Ni100, Ni120, Ni1000

Input type	Min. value	Max. value	Standard
Pt100	-200°C	+850°C	IEC 60751
Ni100	-60°C	+250°C	DIN 43760
Linear resist.	0 Ω	10000 Ω	-
Potentiometer	10 Ω	10000 Ω	-

Cable resistance per wire (max.), RTD . . . . . 50 Ω
Sensor current; RTD . . . . . Nom. 0.2 mA
Effect of sensor cable resistance (3- / 4-wire), RTD . . . . . < 0.002 Ω / Ω
Sensor error detection, RTD . . . . . Programmable ON / OFF
Short circuit detection, RTD . . . . . Yes
* No short circuit detection for Pt10, Pt20 and Pt50
* No short circuit detection for Lin. R_0%≤ app. 18 Ω

TC input

Type	Min. value	Max. value	Standard
B	0°C	+1820°C	IEC 60584-1
E	-100°C	+1000°C	IEC 60584-1
J	-100°C	+1200°C	IEC 60584-1
K	-180°C	+1372°C	IEC 60584-1
L	-200°C	+900°C	DIN 43710
N	-180°C	+1300°C	IEC 60584-1
R	-50°C	+1760°C	IEC 60584-1
S	-50°C	+1760°C	IEC 60584-1
T	-200°C	+400°C	IEC 60584-1
U	-200°C	+600°C	DIN 43710
W3	0°C	+2300°C	ASTM E988-90
W5	0°C	+2300°C	ASTM E988-90
LR	-200°C	+800°C	GOST 3044-84

Cold junction compensation (CJC):
via external sensor in connector 5910. . . . . 20...28°C ≤ ±1°C
-20...20°C and 28...70°C ≤ ±2°C
via internal CJC sensor . . . . . ±(2.0°C + 0.4°C * Δt)
Δt = internal temperature - ambient temperature
Sensor error detection . . . . . Programmable ON or OFF
(only wire breakage)
Sensor error current:
when detecting . . . . . Nom. 2 µA
else. . . . . 0 µA

Current input

Measurement range . . . . . 0...23 mA
Programmable measurement ranges . . . . . 0...20 and 4...20 mA
Input resistance . . . . . Nom. 20 Ω + PTC 50 Ω
Sensor error detection:
Loop break 4...20 mA . . . . . Yes
NB: Only when input is selected as 4...20 mA

Voltage input

Measurement range . . . . . 0...12 VDC
Programmable measurement ranges . . . . . 0...1 / 0.2...1 / 0...5 / 1...5 / 0...10 and 2...10 VDC
Input resistance . . . . . Nom. >10 MΩ

Current output

Signal range (span)	0...23 mA
Programmable signal ranges	0...20 / 4...20 / 20...0 and 20...4 mA
Load	≤ 600 Ω
Load stability	≤ 0.01% of span / 100 Ω
Sensor error detection	0 / 3.5 / 23 mA / none
NAMUR NE 43 Upscale / Downscale	23 mA / 3.5 mA
Output limitation:	
on 4...20 and 20...4 mA signals	3.8...20.5 mA
on 0...20 and 20...0 mA signals	0...20.5 mA
Current limit	≤ 28 mA

Passive 2-wire output installation

Max. external 2-wire supply	26 VDC
Max. load resistance [Ω]	(Vsupply - 3.5) / 0.023 A
Effect of external 2-wire supply voltage variation	< 0.005% of span / V

Relay output in safe area

Relay functions	Setpoint, Window, Sensor error, Power and Off
Hysteresis, in % of span / display range	0.1...25 / 1...25
On and Off delay	0...3600 s
Sensor error reaction	Break / Make / Hold
Max. voltage	250 VAC / VDC
Max. AC current	2 A
Max. AC power	500 VA
Max. DC current, resistive load:	
@ U_{relay} ≤ 30 VDC	2 ADC
@ U_{relay} >30 VDC	[1380 x U_{relay}^{-2} x $1.0085^{U_{relay}}$] ADC

Graphic depiction of [1380 x U_{relay}^{-2} x $1.0085^{U_{relay}}$]:

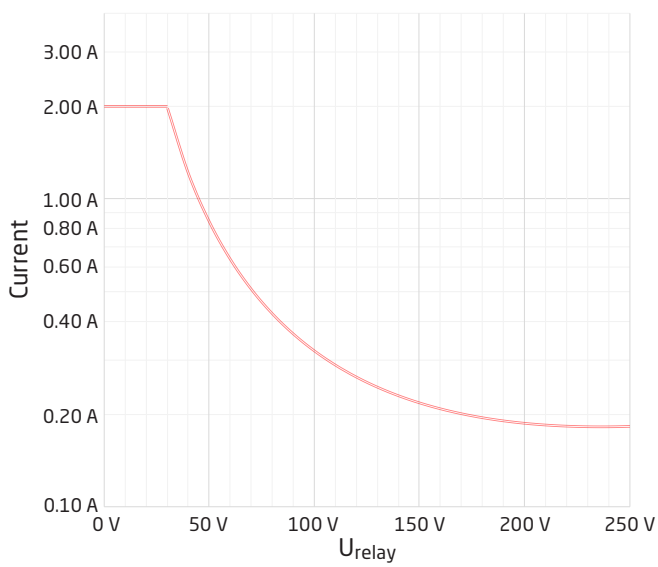

Status relay output terminal 33-34

Relay function	Bistable, closed on fault
Max. voltage	125 VAC / 110 VDC
Max. current	0.5 AAC / 0.3 ADC
Max. voltage - hazardous installation	32 VAC / 32 VDC
Max. current - hazardous installation	0.5 AAC / 1 ADC

of span = of the currently selected measurement range

Observed authority requirements

EMC	2014/30/EU & UK SI 2016/1091
ATEX	2014/34/EU & UK SI 2016/1107
LVD	2014/35/EU & UK SI 2016/1101
RoHS	2011/65/EU & UK SI 2012/3032
EAC	TR-CU 020/2011
EAC LVD	TR-CU 004/2011
EAC Ex	TR-CU 012/2011

Approvals

DNV-GL, Ships & Offshore	TAA00000JD
ClassNK	TA24034M
c UL us, UL 61010-1	E314307

I.S. / Ex

ATEX	KEMA 10ATEX0053 X
IECEx	IECEx KEM 10.0022X
UKEX	DEKRA 21UKEX0177 X / DEKRA 23UKEX0104X
c FM us	FM19US0058X / FM19CA0031X
INMETRO	DEKRA 23.0006X
CCC	2024322316005917
EAC Ex	EAEU KZ 7500361.01.01.08756

Functional Safety

SIL 2 Certified & Fully Assessed acc. to IEC 61508

Configuration of sensor error check

Sensor error check:		
Device:	Configuration	Sensor error detection:
9116	ERR.ACT=NONE - OUT.ERR=NONE.	OFF
	Else:	ON

Visualisation in the PR 4500 of:

Input signal outside range

Outside range readout (IN.LO, IN.HI): If the valid range of the A/D converter or the polynomal is exceeded			
Input	Range	Readout	Limit
VOLT	0...1 V / 0.2...1 V	IN.LO	< -25 mV
		IN.HI	> 1.2 V
	0...10 V / 2...10 V	IN.LO	< -25 mV
		IN.HI	> 12 V
CURR	0...20 mA / 4...20 mA	IN.LO	< -1.05 mA
		IN.HI	> 25.05 mA
LIN.R	0...800 Ω	IN.LO	< -10 Ω
		IN.HI	> 900 Ω
	0...10 kΩ	IN.LO	<-10 Ω
		IN.HI	> 11 kΩ
POTM	0 - 100%	IN.LO	< -0.5 %
		IN.HI	> 100.5 %
TEMP	TC / RTD	IN.LO	< temperature range -2°C
		IN.HI	> temperature range +2°C

Display readout below min. / above max. (-1999, 9999):			
Input	Range	Readout	Limit
All	All	-1999	Display readout <-1999
		9999	Display readout >9999

Sensor error detection

Sensor error detection (SE.BR, SE.SH):			
Input	Range	Readout	Condition
CURR	Loop break (4...20 mA)	SE.BR	<= 3.6 mA; > = 21 mA
POTM	All, SE.BR on all 3-wire	SE.BR	Sensor broken
		SE.SH	Sensor shorted
LIN.R	All	SE.BR	Sensor broken or wire resistance too high
	For Lin. R_0%≥ app. 18 Ω	SE.SH	Sensor shorted
TEMP	All	SE.BR	Sensor broken or wire resistance too high
	Pt100 to Pt1000 and Ni50 to Ni1000	SE.SH	Sensor shorted

Error indications

Readout at hardware error		
Error search	Readout	Cause
CJC sensor error - check device temperature	CJ.ER	Defect internal CJC sensor or CJC temperature out of allowed range**
CJC connector error - check CJC-connector block	CJ.ER	Defect (or missing) CJC-connector or temperature out of allowed range**
Input error - check input connection and reset power	IN.ER	Signal levels on input beyond limits or connected to wrong terminals*
Output error - check output connections and reset power	AO.ER	Error in analogue output current (SIL mode only)*
No communication	NO.CO	No communication with (PR 4500)
Flash memory error - check configuration	FL.ER CO.ER	FLASH error (configuration invalid)***
Invalid configuration type or version	TY.ER	Configuration read from EEprom has invalid type or rev. no.
Hardware error	RA.ER	RAM error*
Hardware error	IF.ER	Internal Flash error*
Hardware error	SW.ER	SW monitor error*
Hardware error	AD.ER	A/D converter error*
Hardware error	AO.SU	Analog output supply error*
Hardware error	CA.ER	Factory calibration error*
Hardware error	CM.ER	Main CPU error*
Hardware error	RE.ER	Relay readback error*
Hardware error	II.ER	Initialisation check error*
Hardware error	RS.ER	Reset error*
Hardware error	IC.ER	Input communication error*
Hardware error	M1.ER	Main CPU to Ch. 1 error*
Hardware error	MC.ER	Main CPU config. error*
Hardware error	MF.ER	Main CPU Flash error*
Hardware error	MR.ER	Main CPU RAM error*
Hardware error	MS.ER	Main CPU supply error*
Hardware error	MP.ER	Main CPU ProgFlow error*
Hardware error	MI.ER	Main CPU initialization check error*
Hardware error	DE.ER	Device error*
Hardware error	FC.ER	Invalid code checksum in PR 4500

!	All error indications in the display flash once per second. The help text explains the error. If the error is a sensor error, the display backlight flashes as well - this is acknowledged (stopped) by pushing the OK button.
*	Error is acknowledged by resetting the device power.
**	Error can be disregarded by selecting input type different than TC.
***	Error is acknowledged by stepping through the basic setup.

Connections

Power rail connections

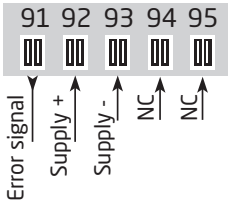

NC = no connection

Supply and status relay

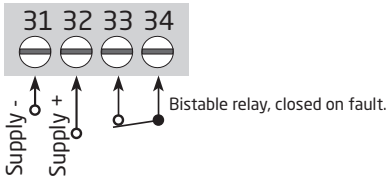

Inputs:

RTD, 2-wire

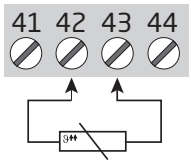

RTD, 3- / 4-wire

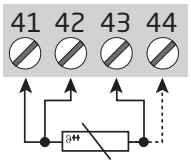

TC, internal CJC sensor

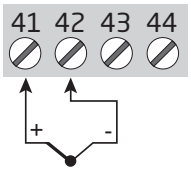

*TC, CJC connector

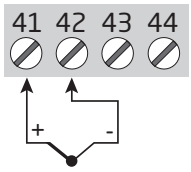

* Order separately: CJC connector 5910 / 5910Ex

Resistance, 2-wire

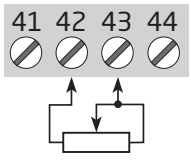

Resistance, 3- / 4-wire

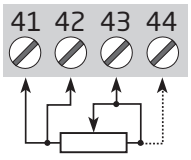

Potentiometer

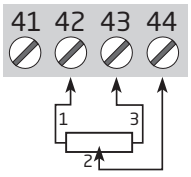

2-wire transmitter

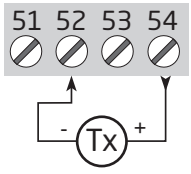

Current

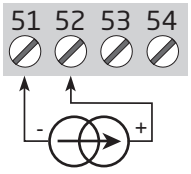

Voltage

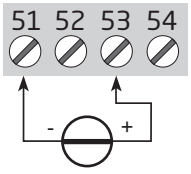

Outputs:

Current (Active output)

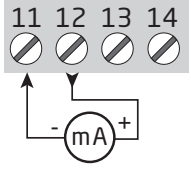

2-wire transmitter (Passive output)

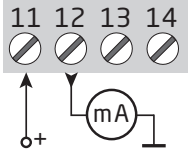

Relay

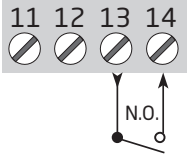

Block diagram

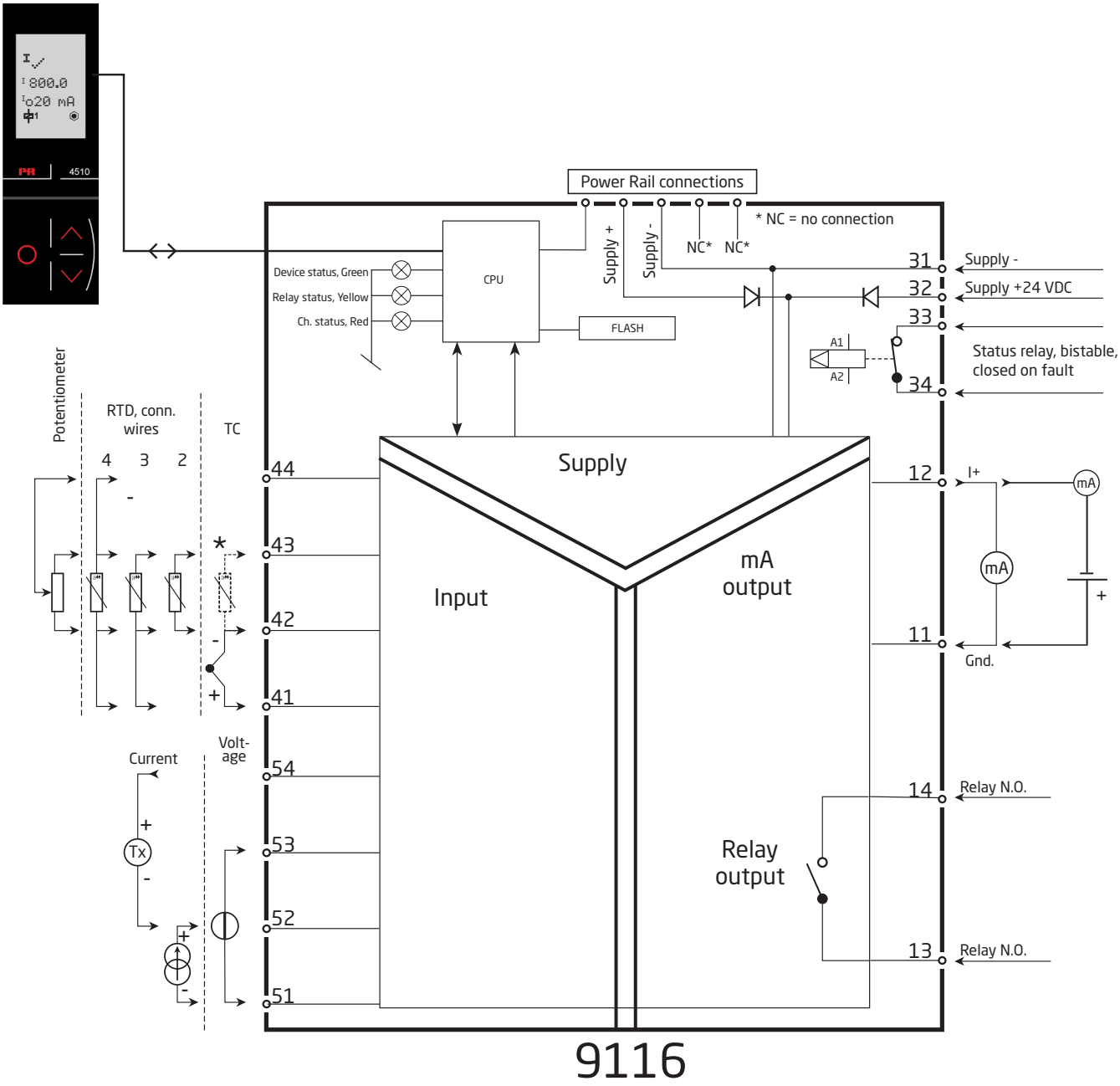

Signal error and cable fault indications without display front

List of LED and error signal indications					
Condition	**Green LED**	**Relay: Yellow LED**	**Error: Red LED**	**Status relay (bistable)**	**Power rail signal status**
No supply	OFF	OFF	OFF	Closed	Closed
Device defective	OFF		ON	Closed	Closed
Device OK	Flashing			Open	Open
Signal OK	Flashing		OFF	Open	Open
Output relay energized	Flashing	ON	OFF	Open	Open
Output relay energized w. wire short/break	Flashing	ON	Flashing	Closed	Closed (if activateded)
Output relay de-energized w. wire short/break	Flashing	OFF	Flashing	Closed	Closed (if activateded)
Output relay de-energized	Flashing	OFF	OFF	Open	Open

Configuration / operating the function keys

Documentation for routing diagram.

In general

When configuring the 9116-EMP, you will be guided through all parameters and you can choose the settings which fit the application. For each menu there is a scrolling help text which is automatically shown in line 3 on the display.

Configuration is carried out by use of the 3 function keys:

- ⌃ will increase the numerical value or choose the next parameter
- ⌄ will decrease the numerical value or choose the previous parameter
- OK will save the chosen value and proceed to the next menu

When configuration is completed, the display will return to the default state 1.0. Pressing and holding OK will return to the previous menu or return to the default state (1.0) without saving the changed values or parameters.

If no key is activated for 1 minute, the display will return to the default state (1.0) without saving the changed values or parameters.

Further explanations

Password protection: Programming access can be blocked by assigning a password. The password is saved in the device in order to ensure a high degree of protection against unauthorised modifications to the configuration. If the configured password is not known, please contact PR electronics support - www.prelectronics.com/contact.
Password protection is mandatory in SIL applications.

Selection of units

After choosing the input signal type you can choose which process units should be shown in the display (see table). By selection of temperature input the process value is always displayed in Celsius or Fahrenheit. This is selected in the menu point after selection of temperature input.

CJC

In the CJC menu you can choose between CJC connector and internal cold junction compensation. The CJC connecter (PR 5910 / PR 5910Ex) must be ordered separately.

Signal and sensor error indication via display front PR 4500

Sensor error (see limits in the table) is displayed as SE.BR (sensor break) or SE.SH (sensor short). Signals outside the selected range (not sensor error, see table for limits) are displayed as IN.LO indicating low input signal or IN.HI indicating high input signal. The error indication is displayed as text in line 1 and at the same time the backlight flashes. Line 4 of the display is a status line which shows whether the device is SIL-locked (static dot = SIL-locked and flashing dot = not SIL-locked) as well as relay status and status for communication COM (running circle) indicating correct functioning of the PR 4500.

Signal and sensor error indication without display front

Status of the unit can also be read from the 3 LEDs in the front of the device.

Green flashing LED indicates normal operation.
No light in the green LED indicates lack of supply voltage or error in the device.
Steady red LED indicates fatal error.
Flashing red LED indicates sensor error.

Relay functions

5 different settings of relay function can be selected.

Setpoint:	The unit works as a single trip amplifier
Window:	The relay has a window that is defined by a low and a high setpoint. On both sides of the window the relay has the same status.
Error function:	The relay is activated by sensor error.
Power:	The relay is activated as long as the power is on.
Off:	The relay is deactivated.

Increasing/decreasing: The relay can be set to activate at increasing or decreasing input signal.

Delay: An ON and an OFF delay can be set in the range 0...3600 s.

Hysteresis: A hysteresis can be set at 0.1...25% of the span or between 1 and 25% of display range.

Window: The window function is selected by choosing "window" in the menu and defining a high and a low setpoint.
See the graphic depiction of the window functions on page 28.

Setpoint: The setpoint function is selected by choosing "setpoint" in the menu and entering the desired limit. The device then works as a single limit switch.
See the graphic depiction of the setpoint functions on page 29.

An activated relay means that the contact is closed if the contact function "normally open" is selected, and the contact is open if the contact function "normally closed" is selected.
The delay time for activation and deactivation can be set independently of each other in the menus ON.DEL and OFF DEL respectively.

Advanced functions

The unit gives access to a number of advanced functions which can be reached by answering "Yes" to the point "ADV.SET".

Display setup: Here you can adjust the brightness contrast and the backlight. Setup of TAG numbers with 5 alphanumerics. Input value is always shown in line 2. Selection of functional readout in line 3 of the display - choose between readout of analog output or tag no or alternating display.

Two-point process calibration: The device can be process-calibrated in 2 points to fit a given input signal . A low input signal (not necessarily 0%) is applied and the actual value is entered via PR 4500. Then a high signal (not necessarily 100%) is applied and the actual value is entered via PR 4500. If you accept to use the calibration, the device will work according to this new adjustment. If you later reject this menu point or choose another type of input signal the device will return to factory calibration.
For initial activation of process calibration both Calibration Low and Calibration High must be performed.

Process simulation function: In the menu point "EN.SIM" it is possible to simulate an input signal by means of the arrow keys and thus control the output signal up or down or the relay state OFF and ON. You must exit the menu by pressing OK (no time-out).
The simulation function exits automatically, if the PR 4500 is detached.

Password: Here you can choose a password between 0000 and 9999 in order to protect the unit against unauthorised modifications to the configuration. The unit is delivered default without password.

Memory: In the memory menu you can save the configuration of the device in the PR 4500, and then move the PR 4500 onto another device of the same type and download the configuration in the new device.
Calibration parameters and relay latch status (where applicable) are device-specific and will not be included in the saved configuration.

Language: In the menu "LANG" you can choose between 7 different language versions of help texts that will appear in the menu. You can choose between UK, DE, FR, IT, ES, SE and DK.

Power rail: In the menu "RAIL" you can choose if sensor errors are transmitted to the central surveillance in the PR 9410 power control unit.

Safety Integrity Level (SIL): See Safety Manual for details.

PR SIL2 IEC 61508 CERTIFIED Full assessment

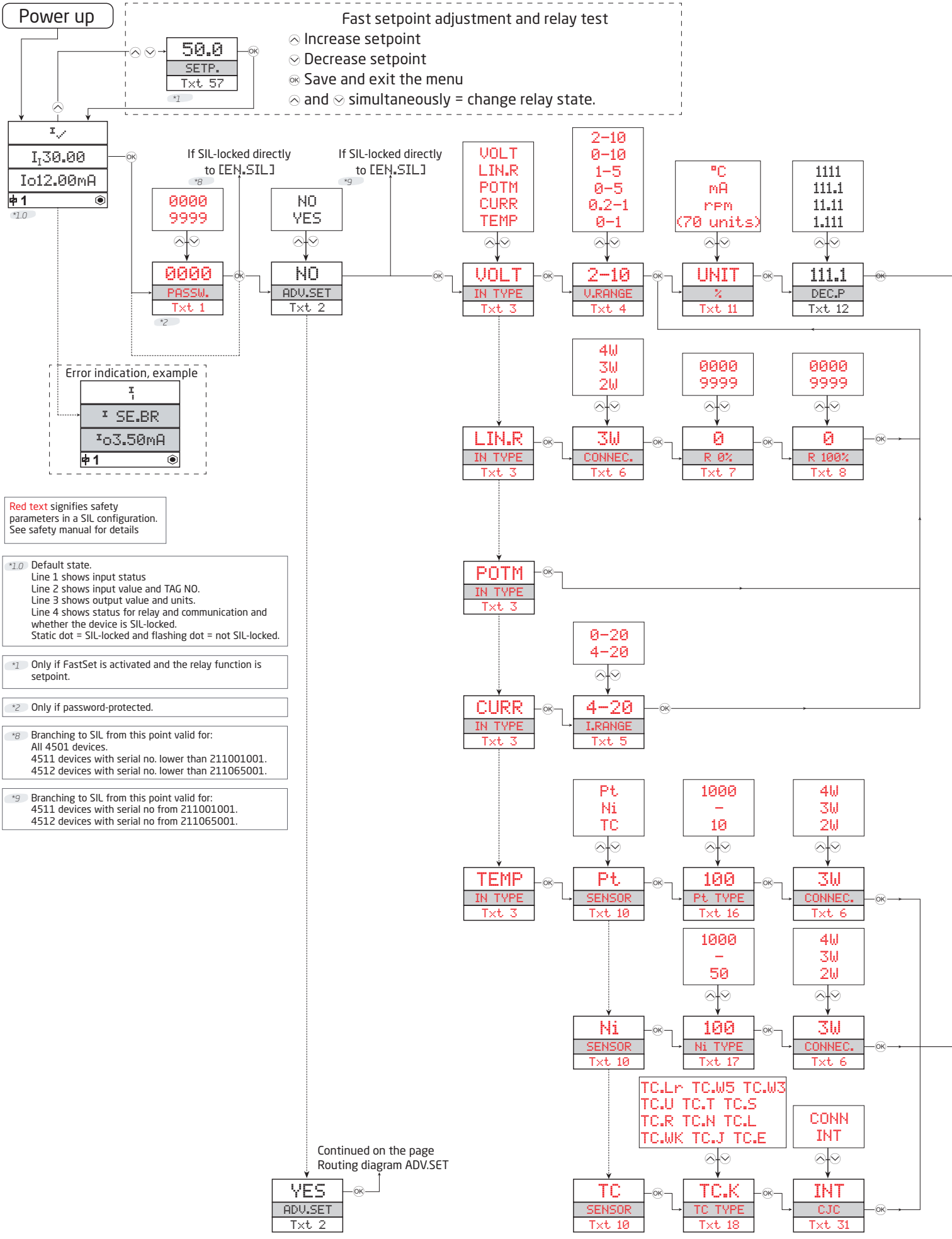

Red text signifies safety parameters in a SIL configuration. See safety manual for details

*1.0 Default state.
Line 1 shows input status
Line 2 shows input value and TAG NO.
Line 3 shows output value and units.
Line 4 shows status for relay and communication and whether the device is SIL-locked.
Static dot = SIL-locked and flashing dot = not SIL-locked.

*1 Only if FastSet is activated and the relay function is setpoint.

*2 Only if password-protected.

*8 Branching to SIL from this point valid for:
All 4501 devices.
4511 devices with serial no. lower than 211001001.
4512 devices with serial no. lower than 211065001.

*9 Branching to SIL from this point valid for:
4511 devices with serial no from 211001001.
4512 devices with serial no from 211065001.

Routing diagram

If no key is activated for 1 minute, the display will return to the default state 1.0 without saving configuration changes.
⌃ Increase value / choose next parameter
⌄ Decrease value / choose previous parameter
OK Save the chosen value and proceed to the next menu
Hold OK Back to previous menu / return to menu 1.0 without saving.

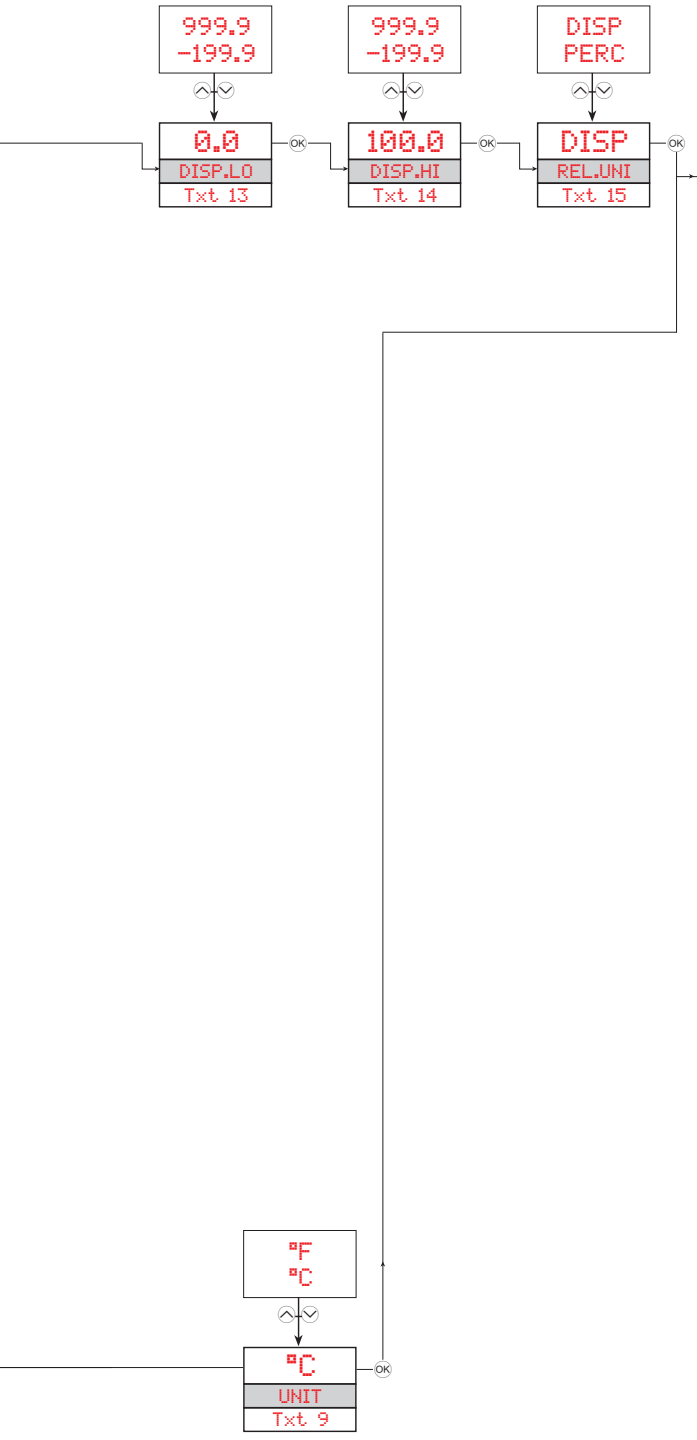

Continued on the next page

Selectable UNITS:

@C	s	rpm	MWh	ohm
@F	min	Hz	kWh	S
K	m/s	t	W	uS
%	mm/s	kg	GW	m3/min
m	m/min	g	MW	m3/h
cm	m/h	N	kW	l/s
mm	in/s	Pa	hp	l/min
um	ips	MPa	A	l/h
ft	ft/s	kPa	kA	gal/min
in	in/min	hPa	mA	gal/h
mils	ft/min	bar	uA	t/h
yd	in/h	mbar	V	mol
m3	ft/h	kJ	kV	pH
l	m/s2	Wh	mV	[blank]

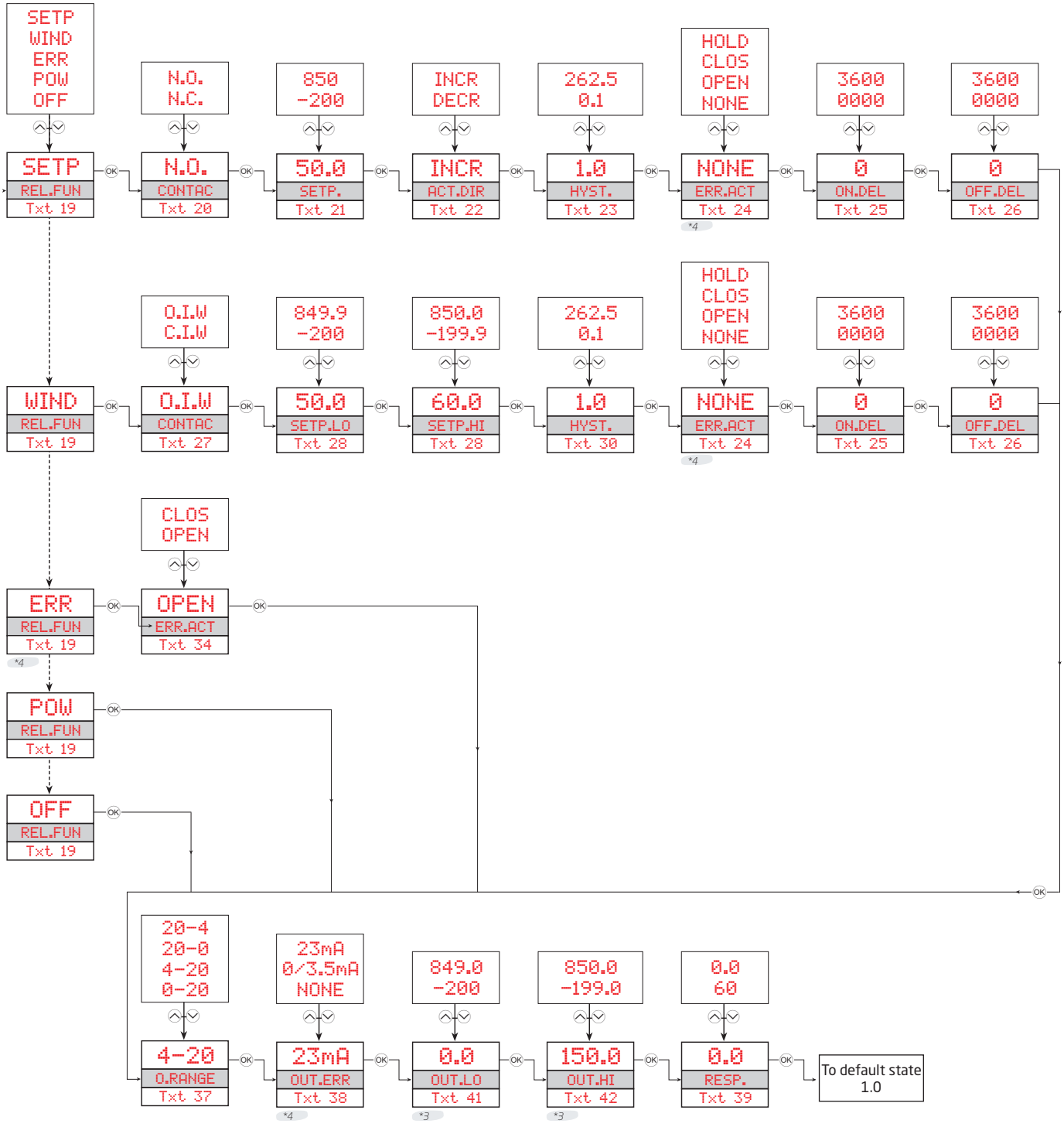

*3 Only if input signal is temperaure.

*4 Only if input types support sensor error check.
Not valid for these input signals: 0...20 mA and voltage.

*6 If password has been set.

*10 Not available on PR 4500 if SIL-locked.
Only for 4512 devices with serial no. from 211065001 and for 4511 devices with serial no. from 211001001.

Routing diagram, advanced settings (ADV.SET)

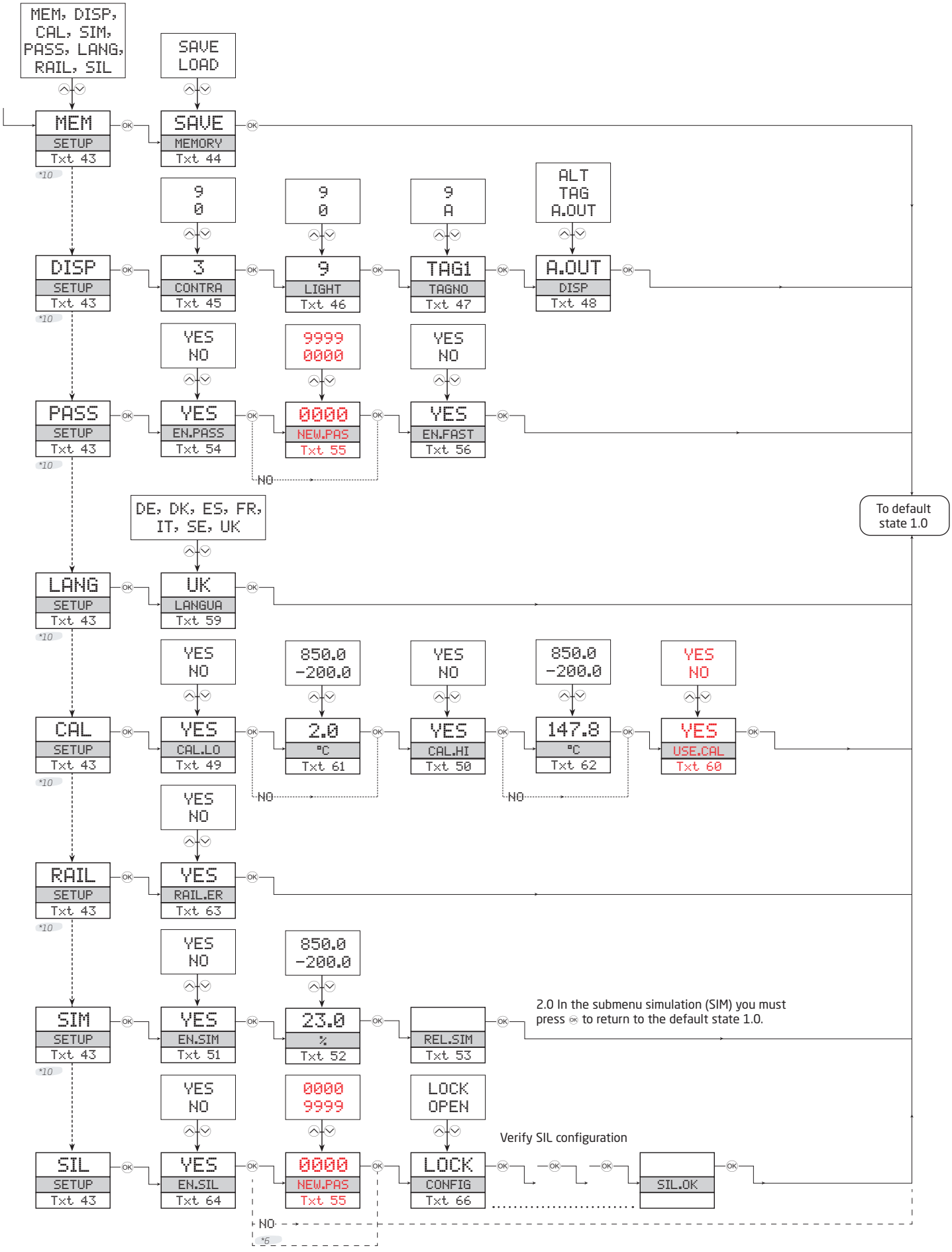

Help text overview

[01] Set correct password
[02] Enter Advanced setup menu?
[03] Select Temperature input
Select Potentiometer input
Select Linear resistance input
Select Current input
Select Voltage input
[04] Select 0.0-1 V input range
Select 0.2-1 V input range
Select 0-5 V input range
Select 1-5 V input range
Select 0-10 V input range
Select 2-10 V input range
[05] Select 0-20 mA input range
Select 4-20 mA input range
[06] Select 2-Wire sensor connection
Select 3-Wire sensor connection
Select 4-Wire sensor connection
[07] Set Resistance value low
[08] Set Resistance value high
[09] Select Celsius as temperature unit
Select Fahrenheit as temperature unit
[10] Select TC sensor type
Select Ni sensor type
Select Pt sensor type
[11] Select Display unit
[12] Select Decimal point position
[13] Set Display range low
[14] Set Display range high
[15] Select Relay setpoint in % of input range
Select Relay setpoint in display units
[16] Select Pt10 sensor type
Select Pt20 sensor type
Select Pt50 sensor type
Select Pt100 sensor type
Select Pt200 sensor type
Select Pt250 sensor type
Select Pt300 sensor type
Select Pt400 sensor type
Select Pt500 sensor type
Select Pt1000 sensor type
[17] Select Ni50 sensor type
Select Ni100 sensor type
Select Ni120 sensor type
Select Ni1000 sensor type
[18] Select TC-B sensor type
Select TC-E sensor type
Select TC-J sensor type
Select TC-K sensor type
Select TC-L sensor type
Select TC-N sensor type
Select TC-R sensor type
Select TC-S sensor type
Select TC-T sensor type
Select TC-U sensor type
Select TC-W3 sensor type
Select TC-W5 sensor type
Select TC-Lr sensor type
[19] Select OFF function - relay is permanently off
Select POWER function - relay indicates power status OK
Select ERROR function - relay indicates sensor error only
Select WINDOW function - relay is controlled by 2 setpoints
Select SETPOINT function - relay is controlled by 1 setpoint
[20] Select Normally Closed contact
Select Normally Open contact
[21] Set Relay setpoint
[22] Select Action on decreasing signal
Select Action on increasing signal
[23] Set Relay hysteresis
[24] Select No error action - undefined status at error
Select Open relay contact at error
Select Close relay contact at error
Select Hold relay status at error
[25] Set Relay ON delay in seconds
[26] Set Relay OFF delay in seconds
[27] Select Contact is Closed Inside Window
Select Contact is Open Inside Window
[28] Set Relay window setpoint low
[29] Set Relay window setpoint high
[30] Set Relay window hysteresis
[31] Select Internal temperature sensor
Select CJC connector (Accessory)
[34] Select Open relay contact at error
Select Close relay contact at error
[37] Select 0-20 mA outout range
Select 4-20 mA output range
Select 20-0 mA output range
Select 20-4 mA output range
[38] Select No error action - output undefined at error
Select Downscale at error
Select Namur NE43 downscale at error
Select Namur NE43 upscale at error
[39] Select Analogue output response time in seconds.
[41] Set Temperature for analogue output low
[42] Set Temperature for analogue output high
[43] Enter SIL setup
Enter Simulation mode
Enter Rail setup
Perform Process Calibration
Enter Language setup
Enter Password setup
Enter Display setup
Perform Memory operations
[44] Load saved configuration into module
Save configuration in display front
[45] Adjust LCD contrast
[46] Adjust LCD backlight
[47] Write a 5-character channel TAG
[48] Show Analog output value in display
Show TAG on display
Alternate shown information in display

[49] Calibrate Input low to process value?
[50] Calibrate Input high to process value?
[51] Enable input simulation?
[52] Set the input simulation value
[53] Relay simulation - use ⌃ to toggle relay
[54] Enable Password protection?
[55] Set New password
[56] Enable Fastset functionality?
[57] Relay setpoint - press OK to save
[58] Relay setpoint - Read only
[59] Select Language
[60] Use process calibration values?
[61] Set value for low calibration point
[62] Set value for high calibration point
[63] Enable Rail status signal output?
[64] Enable SIL configuration lock?
0...20 mA is not a valid output range for SIL operation
[66] Configuration SIL status (Open / Locked)
[80] Sensor short circuit
[81] Sensor wire breakage
[82] Display underrange
[83] Display overrange
[84] Input underrange
[85] Input overrange
[86] Input error - check input connections and reset power
[87] Output error - check connentions and reset power
[88] Flash memory error - chek configuration
[89] Invalid configuration type or version
[90] Hardware error
[91] CJC sensor error - check device temperature
[92] CJC error - check CJC connector block
[93] No communication

Graphic depiction of window

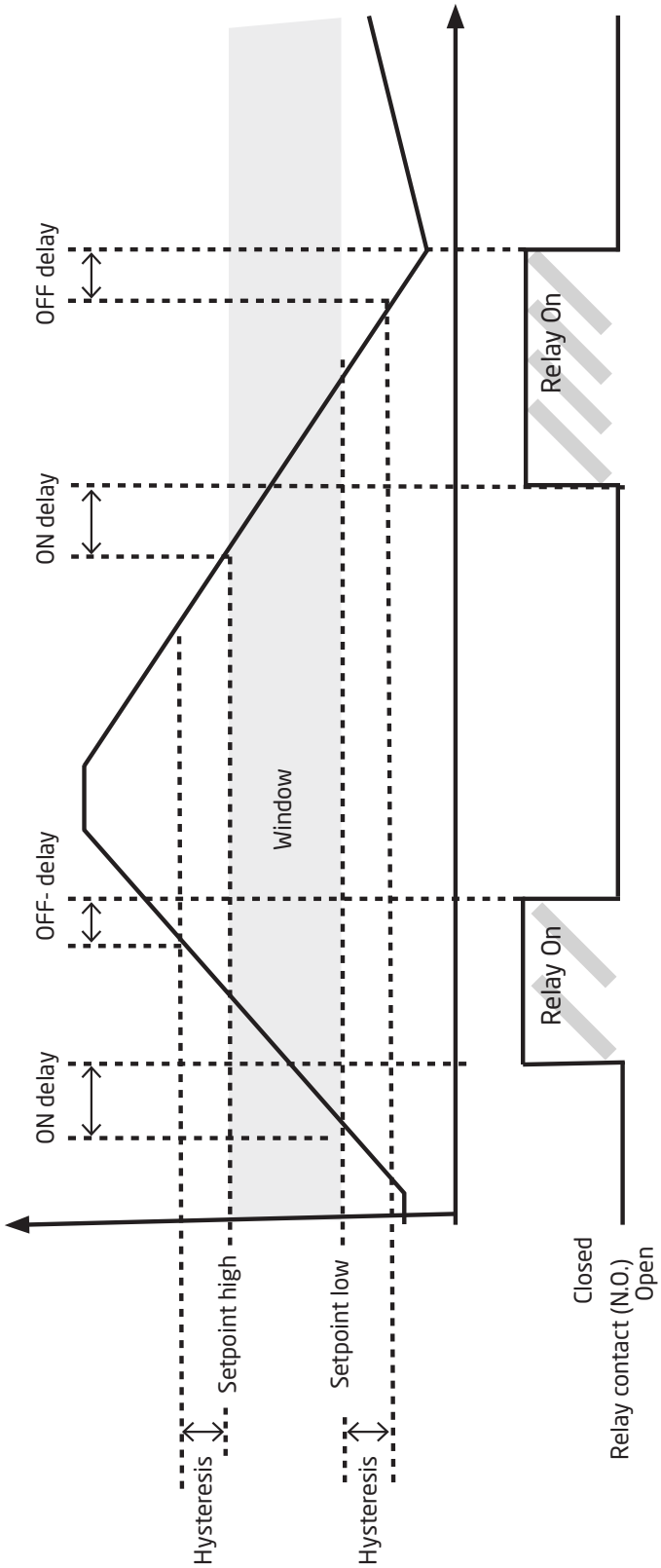

Graphic depiction of setpoint

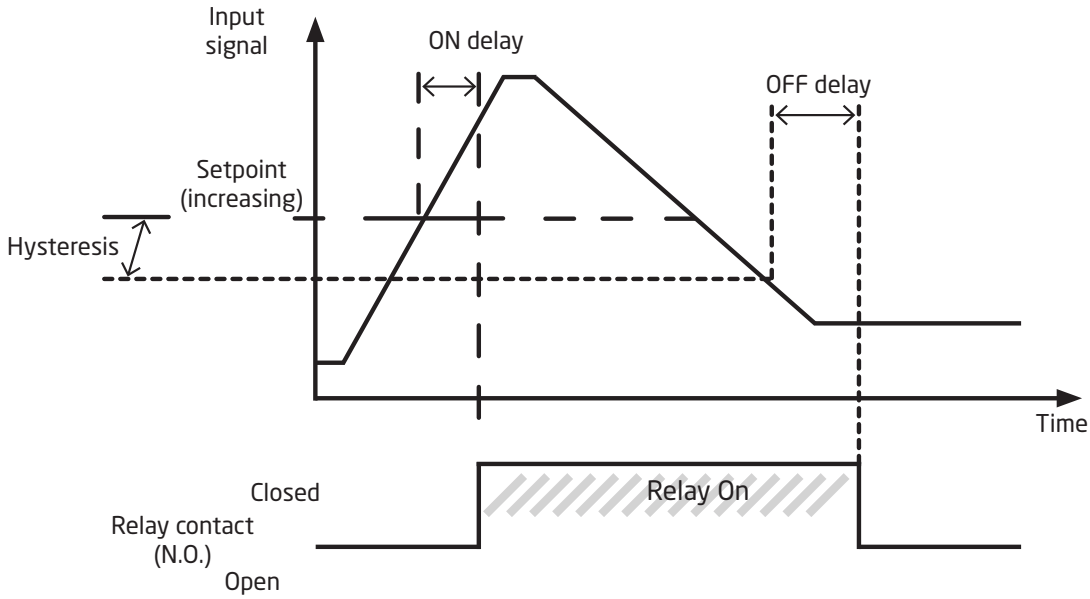

LERBAKKEN 10, 8410 ROENDE DENMARK

IECEx Installation drawing

For safe installation of 9116 the following must be observed. The module shall only be installed by qualified personnel who are familiar with the national and international laws, directives and standards that apply to this area.
Year of manufacture can be taken from the first two digits in the serial number.

For Installation in Zone 2 the following must be observed.
The 4501 programming module is to be used solely with PR electronics modules. It is important that the module is undamaged and has not been altered or modified in any way. Only 4501 modules free of dust and moisture shall be installed.

IECEx Certificate:	KEM 10.0022X
Marking 9116Bxx:	[Ex ia Ga] IIC/IIB/IIA [Ex ia Da] IIIC [Ex ia Ma] I
Marking 9116Bxx, 9116Axx:	Ex ec nC IIC T4 Gc
Standards	IEC60079-0:2017, IEC60079-11:2011, IEC60079-15:2017, IEC60079-7:2015+A1:2017

9116Bxx Installation:

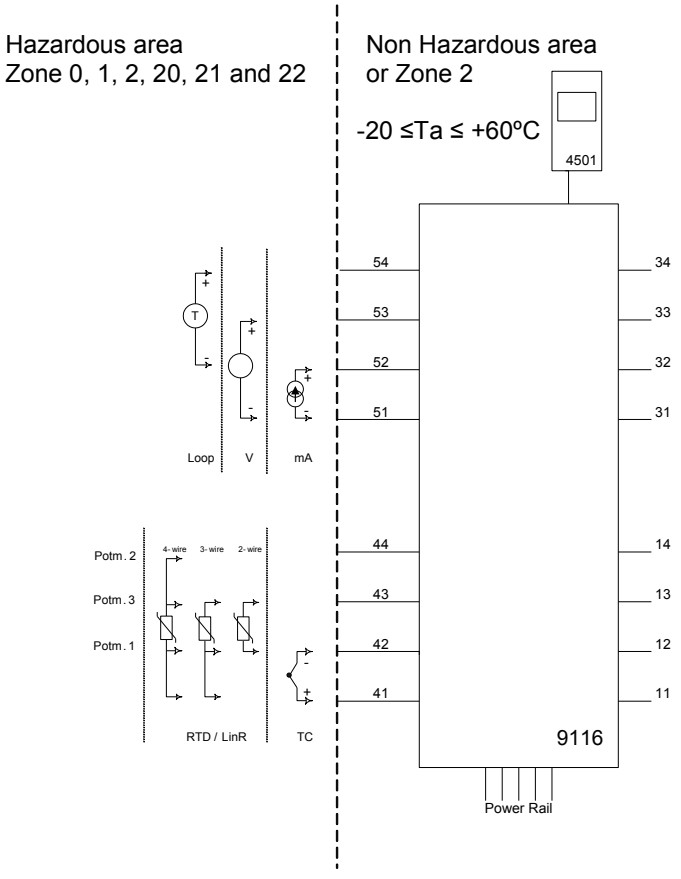

Supply terminal (31,32)
Voltage: 19.2 – 31.2 VDC

Status relay, terminal (33,34)
Zone 2 installation:

Voltage max:	32 VAC/ 32 VDC
Power max:	16 VA / 32 W
Current max:	0.5 A AC / 1 A DC

Relay output, terminal (13,14)
Zone 2 installation

Voltage max:	32 V AC / 30 VDC
Power max:	64 VA / 60 W
Current max:	2 A AC / 2 ADC

(terminal 11,12,13,14)
(terminal 31,32,33,34)
(terminal 91,92,93,94,95)
U_m: 253 V max. 400 Hz

LERBAKKEN 10, 8410 ROENDE DENMARK

Module 9116B1	
Terminal 51-52, 51-53	
Ui	30 V
Ii	120 mA
Pi	900 mW
Ci	3 nF
Li	1 µH

Module 9116B2	
Terminal 51-52, 51-53	
Ui	30 V
Ii	120 mA
Pi	900 mW
Ci	3 nF
Li	1 µH

Module 9116B1 Terminal 51-54, 52-54		Group	Co	Lo	Lo/Ro
Uo	28 V	IIC	80 nF	4 mH	54 µH/Ω
Io	93 mA	IIB	640 nF	16 mH	218 µH/Ω
Po	650 mW	IIA	2.1 µF	32 mH	436 µH/Ω

Module 9116B2 Terminal 51-54, 52-54		Group	Co	Lo	Lo/Ro
Uo	21.4 V	IIC	0.16 µF	4 mH	54 µH/Ω
Io	93 mA	IIB	1.13 µF	16 mH	218 µH/Ω
Po	650 mW	IIA	4.15 µF	32 mH	436 µH/Ω

Module 9116B1 Terminal 51-53		Group	Co	Lo	Lo/Ro
Uo	28 V	IIC	80 nF	1000 mH	4 mH/Ω
Io	1.1 mA	IIB	640 nF	1000 mH	17 mH/Ω
Po	8 mW	IIA	2.1 µF	1000 mH	35 mH/Ω

Module 9116B2 Terminal 51-53		Group	Co	Lo	Lo/Ro
Uo	21.4 V	IIC	0.16 µF	1000 mH	4 mH/Ω
Io	1.1 mA	IIB	1.13 µF	1000 mH	17 mH/Ω
Po	8 mW	IIA	4.15 µF	1000 mH	35 mH/Ω

Module 9116B1 Terminal 51-52		Group	Co	Lo	Lo/Ro
Uo	8.3 V	IIC	7 µF	1000 mH	100 mH/Ω
Io	0.2 mA	IIB	73 µF	1000 mH	400 mH/Ω
Po	0.4 mW	IIA	1000 µF	1000 mH	800 mH/Ω
Module 9116B1 Terminal 41,42,43,44		Group	Co	Lo	Lo/Ro
Uo	8.3 V	IIC	7 µF	207 mH	1 mH/Ω
Io	13.1 mA	IIB	73 µF	828 mH	5 mH/Ω
Po	27.3 mW	IIA	1000 µF	1000 mH	10 mH/Ω

Module 9116B2 Terminal 51-52		Group	Co	Lo	Lo/Ro
Uo	8.3 V	IIC	7 µF	1000 mH	100 mH/Ω
Io	0.2 mA	IIB	73 µF	1000 mH	400 mH/Ω
Po	0.4 mW	IIA	1000 µF	1000 mH	800 mH/Ω
Module 9116B2 Terminal 41,42,43,44		Group	Co	Lo	Lo/Ro
Uo	8.3 V	IIC	7 µF	207 mH	1 mH/Ω
Io	13.1 mA	IIB	73 µF	828 mH	5 mH/Ω
Po	27.3 mW	IIA	1000 µF	1000 mH	10 mH/Ω

Installation notes:

For group I (mines), the parameters for group IIA apply.

Install in pollution degree 2, overvoltage category II as defined in IEC60664-1

Do not separate connectors when energized and an explosive gas mixture is present.

Do not mount or remove modules from the Power Rail when an explosive gas mixture is present.

Disconnect power before servicing.

The wiring of unused terminals is not allowed.

In type of protection [Ex ia Da] the parameters for intrinsic safety for gas group IIB are applicable.

For installation in Zone 2, the module shall be installed in an enclosure in type of protection Ex n or Ex e, providing a degree of protection of at least IP54. Cable entry devices and blanking elements shall fulfill the same requirements.

For installation on Power Rail in Zone 2, only Power Rail type 9400 supplied by Power Control Unit type 9410 (Type Examination Certificate KEMA 07ATEX0152 X) is allowed.

Max. screw terminal torque 0.5 Nm.
Stranded wire should be installed with an insulation stripping length of 5 mm or via a suitable insulated terminal such as a bootlace ferrule.

LERBAKKEN 10, 8410 ROENDE DENMARK

9116Bxx Installation:

Hazardous area
Zone 0,1,2, 20, 21, 22

Non Hazardous area
or Zone 2

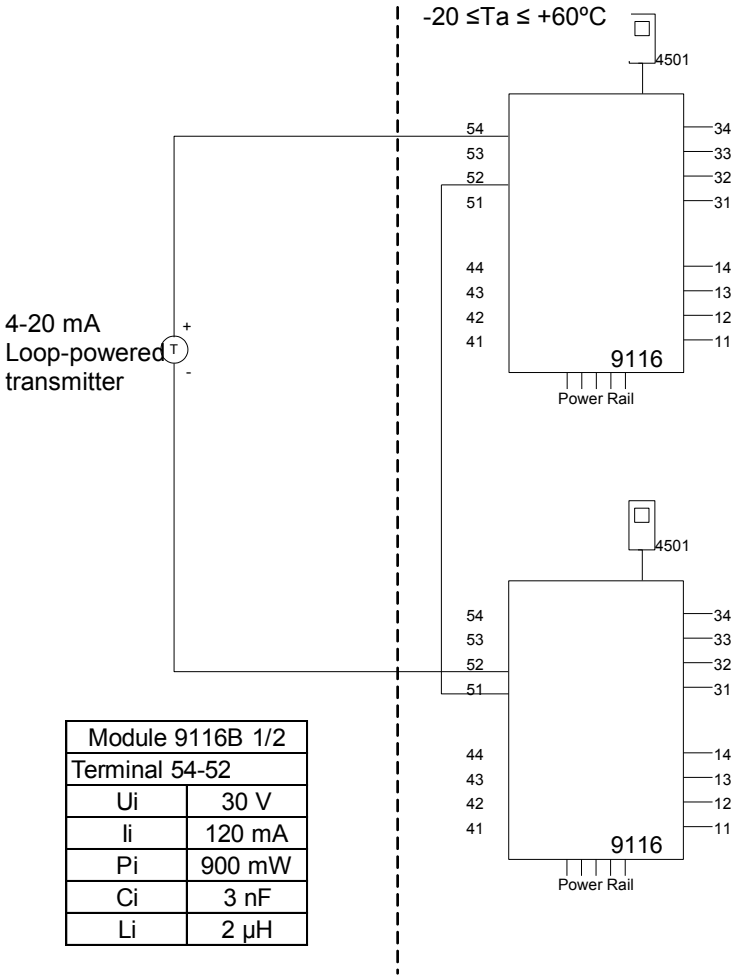

Module 9116B 1/2	
Terminal 54-52	
Ui	30 V
Ii	120 mA
Pi	900 mW
Ci	3 nF
Li	2 µH

Supply terminal (31,32)
Voltage: 19.2 – 31.2 VDC

Status relay, terminal (33,34)

Zone 2 installation:
Voltage max: 32 VAC/ 32 VDC
Power max: 16 VA / 32 W
Current max: 0.5 A AC / 1 A DC

Relay output, terminal (13,14)

Zone 2 installation
Voltage max: 32 V AC / 30 VDC
Power max: 64 VA / 60 W
Current max: 2 A AC / 2 ADC

(terminal 11,12,13,14)
(terminal 31,32,33,34)
(terminal 91,92,93,94,95)
U_m: 253 V max. 400 Hz

Module 9116B1 Term. 54-52; 51-52		Group	Co	Lo	Lo/Ro
Uo	28 V	IIC	80 nF	4 mH	54 µH/Ω
Io	93 mA	IIB	640 nF	16 mH	218 µH/Ω
Po	650 mW	IIA	2.1 µF	32 mH	436 µH/Ω

Module 9116B2 Term. 54-52; 51-52		Group	Co	Lo	Lo/Ro
Uo	21.4 V	IIC	0.16 µF	4 mH	54 µH/Ω
Io	93 mA	IIB	1.13 µF	16 mH	218 µH/Ω
Po	650 mW	IIA	4.15 µF	32 mH	436 µH/Ω

LERBAKKEN 10, 8410 ROENDE DENMARK

9116Bxx Installation:

Hazardous area
Zone 0, 1, 2, 20, 21, 22

Non Hazardous area
or Zone 2

-20 ≤Ta ≤ +60ºC

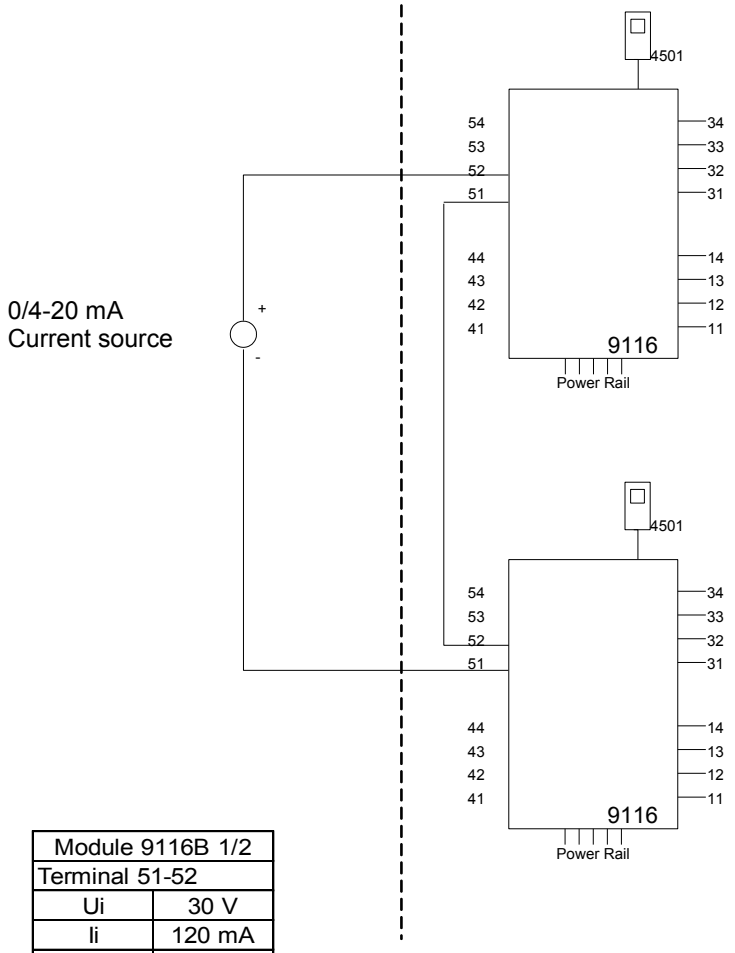

Supply terminal (31,32)
Voltage: 19.2 – 31.2 VDC

Status relay, terminal (33,34)

Zone 2 installation:
Voltage max: 32 VAC/ 32 VDC
Power max: 16 VA / 32 W
Current max: 0.5 A AC / 1 A DC

Relay output, terminal (13,14)

Zone 2 installation
Voltage max: 32 V AC / 30 VDC
Power max: 64 VA / 60 W
Current max: 2 A AC / 2 ADC

(terminal 11,12,13,14)
(terminal 31,32,33,34)
(terminal 91,92,93,94,95)
U_m: 253 V max. 400 Hz

Module 9116B 1/2	
Terminal 51-52	
Ui	30 V
Ii	120 mA
Pi	900 mW
Ci	3 nF
Li	2 µH

Module 9116B 1/2 Term. 52-51, 51-52		Group	Co	Lo	Lo/Ro
Uo	16.6 V	IIC	0.4 µF	100 mH	25mH/Ω
Io	0.2 mA	IIB	2.3 µF	100 mH	100mH/Ω
Po	0.8 mW	IIA	9.5 µF	100 mH	200mH/Ω

LERBAKKEN 10, 8410 ROENDE DENMARK

9116Axx Installation:

Non Hazardous area or Zone 2

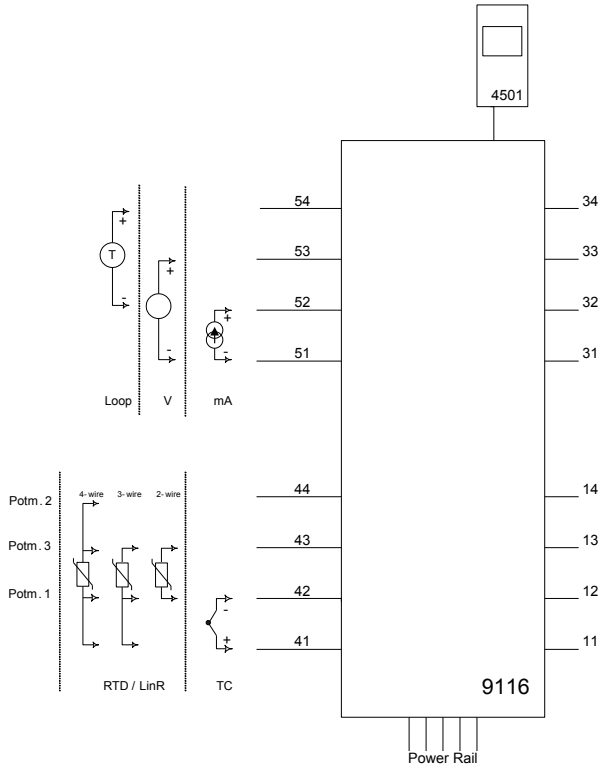

Supply terminal (31,32)

Voltage:	19.2 – 31.2 VDC

Status relay, terminal (33,34)

Zone 2 installation:

Voltage max:	32 VAC/ 32 VDC
Power max:	16 VA / 32 W
Current max:	0.5 A AC / 1 A DC

Relay output, terminal (13,14)

Zone 2 installation

Voltage max:	32 V AC / 30 VDC
Power max:	64 VA / 60 W
Current max:	2 A AC / 2 ADC

For installation in Zone 2, the module shall be installed in an enclosure in type of protection Ex n or Ex e, providing a degree of protection of at least IP54. Cable entry devices and blanking elements shall fulfill the same requirements.

For installation on Power Rail in Zone 2, only Power Rail type 9400 supplied by Power Control Unit type 9410 (Type Examination Certificate IECEx KEM 08.0025X) is allowed.

The 4501 programming module is to be used solely with PR electronics' modules. It is important that the module is undamaged and has not been altered or modified in any way.
Only 4501 modules free of dust and moisture shall be installed.

LERBAKKEN 10, 8410 RØNDE DENMARK

ATEX / UKEX Installation drawing

For safe installation of 9116 the following must be observed. The module shall only be installed by qualified personnel who are familiar with the national and international laws, directives and standards that apply to this area.
Year of manufacture can be taken from the first two digits in the serial number.

For installation in Zone 2 the following must be observed.
The 4501 programming module is to be used solely with PR electronics' modules. It is important that the module is undamaged and has not been altered or modified in any way.
Only 4501 modules free of dust and moisture shall be installed.

ATEX Certificate:	KEMA 10 ATEX 0053 X
UKEX Certificate 9116Bxx:	DEKRA 23UKEX0104 X
UKEX Certificate 9116Axx, 9116Bxx:	DEKRA 21UKEX0177 X
Marking 9116Bxx:	II (1) G [Ex ia Ga] IIC/IIB/IIA II (1) D [Ex ia Da] IIIC I (M1) [Ex ia Ma] I
Marking 9116Bxx, 9116Axx	II 3G Ex ec nC IIC T4 Gc
Standards	EN 60079-0:2018, EN 60079-11:2012, EN 60079-15:2019, EN60079-7:2015+A1:2018

Specific Conditions of Use
For group I (mines), the parameters for group IIA apply.

Install in pollution degree 2, overvoltage category II as defined in EN60664-1

Do not separate connectors when energized and an explosive gas mixture is present.
Do not mount or remove modules from the Power Rail when an explosive gas mixture is present.
Disconnect power before servicing.
The wiring of unused terminals is not allowed.

In type of protection [Ex ia Da] the parameters for intrinsic safety for gas group IIB are applicable.

For installation in Zone 2, the module shall be installed in an enclosure in type of protection Ex e, providing a degree of protection of at least IP54. Cable entry devices and blanking elements shall fulfill the same requirements.

For installation on Power Rail in Zone 2, only Power Rail type 9400 supplied by Power Control Unit type 9410 (Type Examination Certificate KEMA 07ATEX0152 X, DEKRA 21UKEX0169 X) is allowed.

Max. screw terminal torque 0.5 Nm.

Stranded wire should be installed with an insulation stripping length of 5 mm or via a suitable insulated terminal such as a bootlace ferrule.

LERBAKKEN 10, 8410 RØNDE DENMARK

9116Bxx Installation:

Hazardous area
Zone 0,1,2, 20, 21, 22

Non Hazardous area
or Zone 2

-20 ≤Ta ≤ +60ºC

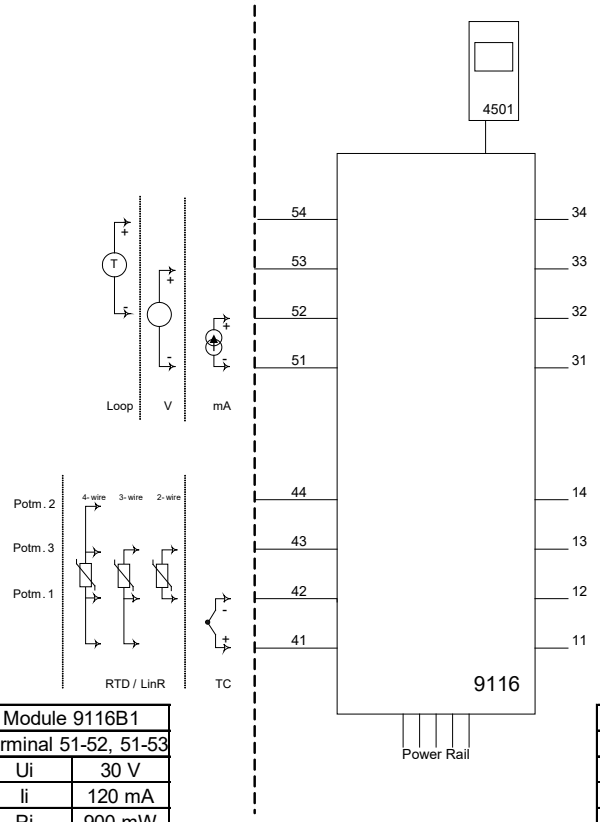

Supply terminal (31,32)
Voltage: 19.2 – 31.2 VDC

Status relay, terminal (33,34)

Zone 2 installation:
Voltage max: 32 VAC/ 32 VDC
Power max: 16 VA / 32 W
Current max: 0.5 A AC / 1 A DC

Relay output, terminal (13,14)

Zone 2 installation
Voltage max: 32 V AC / 30 VDC
Power max: 64 VA / 60 W
Current max: 2 A AC / 2 ADC

(terminal 11,12,13,14)
(terminal 31,32,33,34)
(terminal 91,92,93,94,95)
U_m: 253 V max. 400 Hz

Module 9116B1	
Terminal 51-52, 51-53	
Ui	30 V
Ii	120 mA
Pi	900 mW
Ci	3 nF
Li	1 µH

Module 9116B2	
Terminal 51-52, 51-53	
Ui	30 V
Ii	120 mA
Pi	900 mW
Ci	3 nF
Li	1 µH

Module 9116B1 Terminal 51-54, 52-54		Group	Co	Lo	Lo/Ro
Uo	28 V	IIC	80 nF	4 mH	54 µH/Ω
Io	93 mA	IIB	640 nF	16 mH	218 µH/Ω
Po	650 mW	IIA	2.1 µF	32 mH	436 µH/Ω

Module 9116B2 Terminal 51-54, 52-54		Group	Co	Lo	Lo/Ro
Uo	21.4 V	IIC	0.16 µF	4 mH	54 µH/Ω
Io	93 mA	IIB	1.13 µF	16 mH	218 µH/Ω
Po	650 mW	IIA	4.15 µF	32 mH	436 µH/Ω

Module 9116B1 Terminal 51-53		Group	Co	Lo	Lo/Ro
Uo	28 V	IIC	80 nF	1000 mH	4 mH/Ω
Io	1.1 mA	IIB	640 nF	1000 mH	17 mH/Ω
Po	8 mW	IIA	2.1 µF	1000 mH	35 mH/Ω

Module 9116B2 Terminal 51-53		Group	Co	Lo	Lo/Ro
Uo	21.4 V	IIC	0.16 µF	1000 mH	4 mH/Ω
Io	1.1 mA	IIB	1.13 µF	1000 mH	17 mH/Ω
Po	8 mW	IIA	4.15 µF	1000 mH	35 mH/Ω

Module 9116B1 Terminal 51-52		Group	Co	Lo	Lo/Ro
Uo	8.3 V	IIC	7 µF	1000 mH	100 mH/Ω
Io	0.2 mA	IIB	73 µF	1000 mH	400 mH/Ω
Po	0.4 mW	IIA	1000 µF	1000 mH	800 mH/Ω
Module 9116B1 Terminal 41,42,43,44		Group	Co	Lo	Lo/Ro
Uo	8.3 V	IIC	7 µF	207 mH	1 mH/Ω
Io	13.1 mA	IIB	73 µF	828 mH	5 mH/Ω
Po	27.3 mW	IIA	1000 µF	1000 mH	10 mH/Ω

Module 9116B2 Terminal 51-52		Group	Co	Lo	Lo/Ro
Uo	8.3 V	IIC	7 µF	1000 mH	100 mH/Ω
Io	0.2 mA	IIB	73 µF	1000 mH	400 mH/Ω
Po	0.4 mW	IIA	1000 µF	1000 mH	800 mH/Ω
Module 9116B2 Terminal 41,42,43,44		Group	Co	Lo	Lo/Ro
Uo	8.3 V	IIC	7 µF	207 mH	1 mH/Ω
Io	13.1 mA	IIB	73 µF	828 mH	5 mH/Ω
Po	27.3 mW	IIA	1000 µF	1000 mH	10 mH/Ω

LERBAKKEN 10, 8410 RØNDE DENMARK

9116Bxx Installation:

Hazardous area
Zone 0,1,2, 20, 21, 22

Non Hazardous area
or Zone 2

-20 ºC ≤Ta ≤ +60ºC

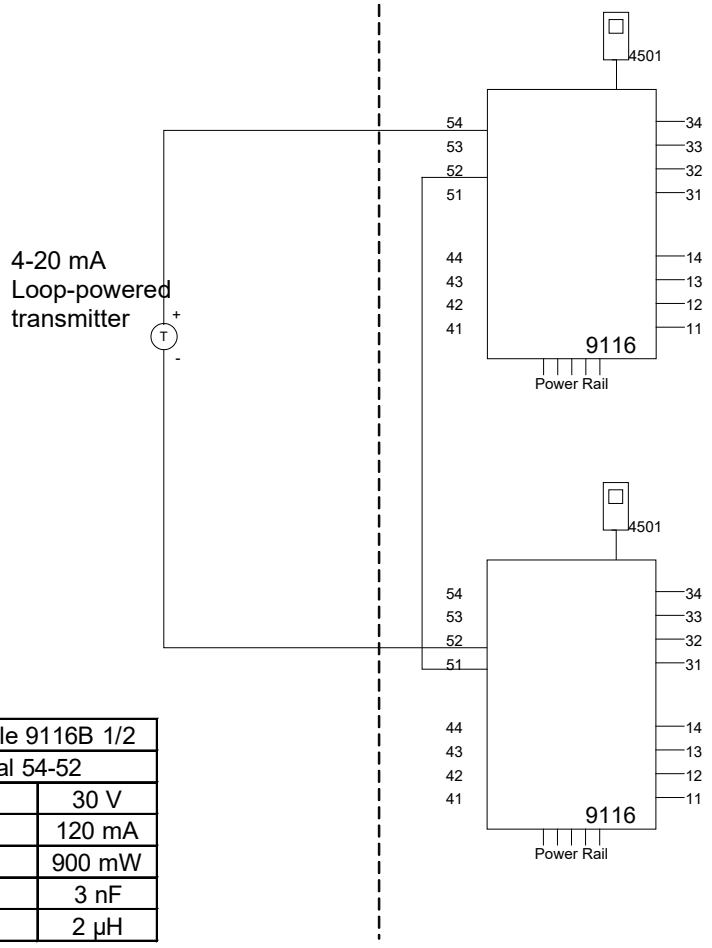

Supply terminal (31,32)
Voltage: 19.2 – 31.2 VDC

Status relay, terminal (33,34)
Zone 2 installation:
Voltage max: 32 VAC/ 32 VDC
Power max: 16 VA / 32 W
Current max: 0.5 A AC / 1 A DC

Relay output, terminal (13,14)
Zone 2 installation
Voltage max: 32 V AC / 30 VDC
Power max: 64 VA / 60 W
Current max: 2 A AC / 2 ADC

(terminal 11,12,13,14)
(terminal 31,32,33,34)
(terminal 91,92,93,94,95)
U_m: 253 V max. 400 Hz

Module 9116B 1/2	
Terminal 54-52	
Ui	30 V
Ii	120 mA
Pi	900 mW
Ci	3 nF
Li	2 µH

Module 9116B1 Term. 54-52; 51-52		Group	Co	Lo	Lo/Ro
Uo	28 V	IIC	80 nF	4 mH	54 µH/Ω
Io	93 mA	IIB	640 nF	16 mH	218 µH/Ω
Po	650 mW	IIA	2.1 µF	32 mH	436 µH/Ω

Module 9116B2 Term. 54-52; 51-52		Group	Co	Lo	Lo/Ro
Uo	21.4 V	IIC	0.16 µF	4 mH	54 µH/Ω
Io	93 mA	IIB	1.13 µF	16 mH	218 µH/Ω
Po	650 mW	IIA	4.15 µF	32 mH	436 µH/Ω

LERBAKKEN 10, 8410 RØNDE DENMARK

9116Bxx Installation:

Hazardous area
Zone 0,1,2, 20, 21, 22

Non Hazardous area
or Zone 2

-20 ºC ≤Ta ≤ +60ºC

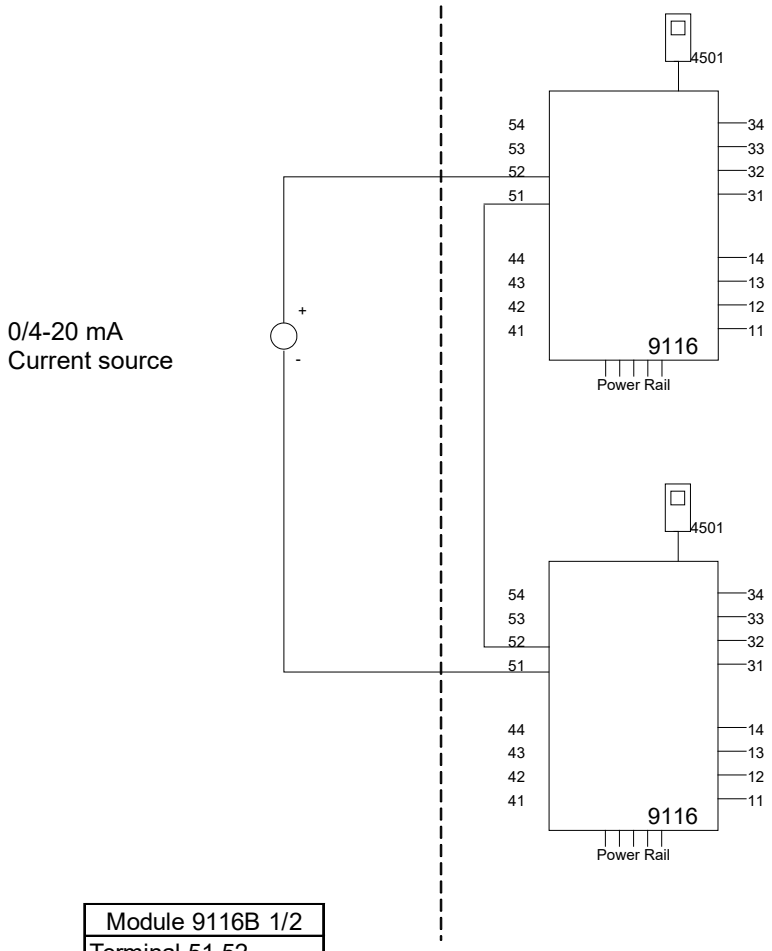

Supply terminal (31,32)
Voltage: 19.2 – 31.2 VDC

Status relay, terminal (33,34)
Zone 2 installation:
Voltage max: 32 VAC/ 32 VDC
Power max: 16 VA / 32 W
Current max: 0.5 A AC / 1 A DC

Relay output, terminal (13,14)
Zone 2 installation
Voltage max: 32 V AC / 30 VDC
Power max: 64 VA / 60 W
Current max: 2 A AC / 2 ADC

(terminal 11,12,13,14)
(terminal 31,32,33,34)
(terminal 91,92,93,94,95)
U_m: 253 V max. 400 Hz

Module 9116B 1/2	
Terminal 51-52	
Ui	30 V
Ii	120 mA
Pi	900 mW
Ci	3 nF
Li	2 µH

Module 9116B 1/2 Term. 52-51, 51-52		Group	Co	Lo	Lo/Ro
Uo	16.6 V	IIC	0.4 µF	100 mH	25mH/Ω
Io	0.2 mA	IIB	2.3 µF	100 mH	100mH/Ω
Po	0.8 mW	IIA	9.5 µF	100 mH	200mH/Ω

LERBAKKEN 10, 8410 RØNDE DENMARK

9116Axx Installation:

Non Hazardous area or Zone 2

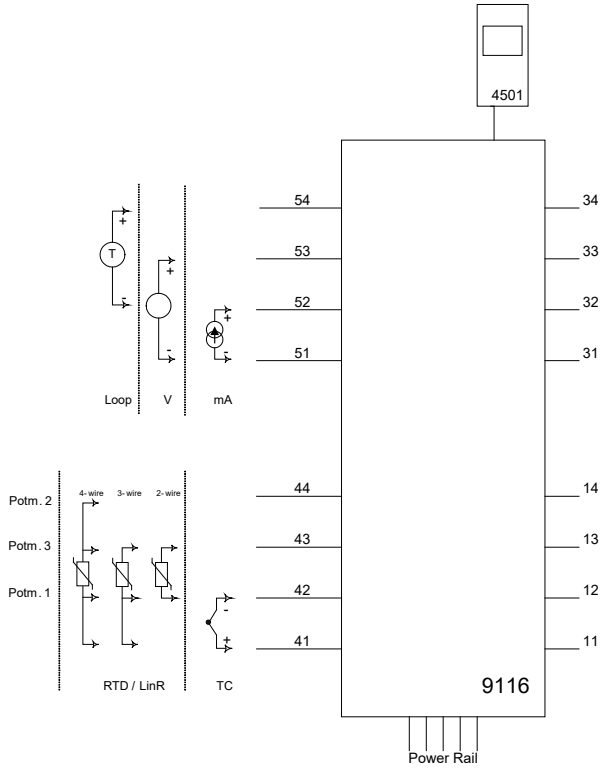

Supply terminal (31,32)

Voltage:	19.2 – 31.2 VDC

Status relay, terminal (33,34)

Zone 2 installation:

Voltage max:	32 VAC/ 32 VDC
Power max:	16 VA / 32 W
Current max:	0.5 A AC / 1 A DC

Relay output, terminal (13,14)

Zone 2 installation

Voltage max:	32 V AC / 30 VDC
Power max:	64 VA / 60 W
Current max:	2 A AC / 2 ADC

For installation in Zone 2, the module shall be installed in an enclosure in type of protection Ex e, providing a degree of protection of at least IP54. Cable entry devices and blanking elements shall fulfill the same requirements.

For installation on Power Rail in Zone 2, only Power Rail type 9400 supplied by Power Control Unit type 9410 (Type Examination Certificate KEMA 07ATEX0152 X, DEKRA 21UKEX0169 X) is allowed.

The 4501 programming module is to be used solely with PR electronics' modules. It is important that the module is undamaged and has not been altered or modified in any way.
Only 4501 modules free of dust and moisture shall be installed.

Max. screw terminal torque 0.5 Nm.
Stranded wire should be installed with an insulation stripping length of 5 mm or via a suitable insulated terminal such as a bootlace ferrule.

LERBAKKEN 10, 8410 ROENDE DENMARK

FM Installation drawing

9116
For safe installation of 9116B the following must be observed. The module shall only be installed by qualified personnel who are familiar with the national and international laws, directives and standards that apply to this area.
Year of manufacture can be taken from the first two digits in the serial number.

4501
For Installation in Zone 2 / Division 2 the following must be observed.
The 4501 programming module is to be used solely with PR electronics modules. It is important that the module is undamaged and has not been altered or modified in any way. Only 4501 modules free of dust and moisture shall be installed.

Hazardous Classified Location
Class I/II/III, Division 1, Group A,B,C,D,E,F,G
or Class I, Zone 0/1 Group IIC, [AEx ia] IIC
or Group IIC, [Ex ia Ga] IIC Gc

Unclassified Location or
Hazardous Classified Location
Class I, Division 2, Group A,B,C,D T4
or Class I Zone 2 Group IIC T4 Gc

Simple Apparatus or
Intrinsic safe apparatus
with entity parameters:

Vmax (Ui) ≥ Vt (Uo)
Imax (Ii) ≥ It (Io)
Pi ≥ Pt (Po)
Ca ≥ Ccable + Ci
La ≥ Lcable + Li

-20 ≤Ta ≤ +60ºC

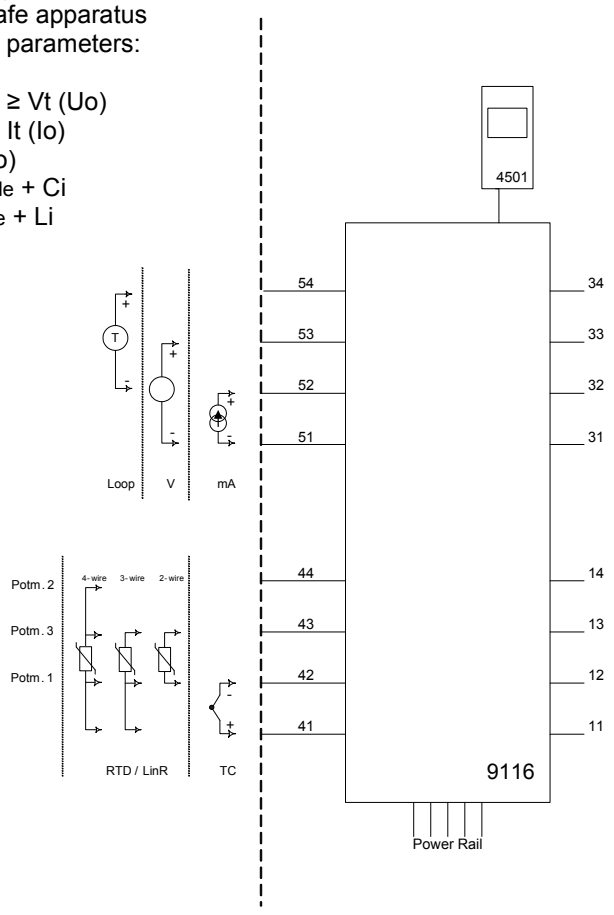

Status relay, terminal (33,34)

Non hazardous area installation
Voltage max: 125 VAC / 110 VDC
Power max: 62.5 VA / 32 W
Current max: 0.5 A AC / 0.3 ADC

Zone 2 installation:
Voltage max: 32 VAC/ 32 VDC
Power max: 16 VA / 32 W
Current max: 0.5 A AC / 1 A DC

Relay output, terminal (13,14)

Non hazardous area installation
Voltage max: 250 VAC / 30 VDC
Power max: 500 VA / 60 W
Current max: 2 A AC / 2 ADC

Zone 2 installation
Voltage max: 32 V AC / 30 VDC
Power max: 64 VA / 60 W
Current max: 2 A AC / 2 ADC

(terminal 11,12,13,14)
(terminal 31,32,33,34)
(terminal 91,92,93,94,95)
U_m: 253 V max. 400 Hz

LERBAKKEN 10, 8410 ROENDE DENMARK

Module 9116B1	
Terminal 51-52, 51-53	
Ui, Vmax	30 V
Ii, Imax	120 mA
Pi	900 mW
Ci	3 nF
Li	1 µH

Module 9116B2	
Terminal 51-52, 51-53	
Ui, Vmax	30 V
Ii, Imax	120 mA
Pi	900 mW
Ci	3 nF
Li	1 µH

Module 9116B1 Terminal 51-54, 52-54		Group	Co	Lo	Lo/Ro
Uo, Voc	28 V	IIC or A,B	80 nF	4 mH	54 µH/Ω
Io, Isc	93 mA	IIB or C,E,F	640 nF	16 mH	218 µH/Ω
Po	650 mW	IIA or D,G	2.1 µF	32 mH	436 µH/Ω

Module 9116B2 Terminal 51-54, 52-54		Group	Co	Lo	Lo/Ro
Uo, Voc	21.4 V	IIC or A,B	0.16 µF	4 mH	54 µH/Ω
Io, Isc	93 mA	IIB or C,E,F	1.13 µF	16 mH	218 µH/Ω
Po	650 mW	IIA or D,G	4.15 µF	32 mH	436 µH/Ω

Module 9116B1 Terminal 51-53		Group	Co	Lo	Lo/Ro
Uo, Voc	28 V	IIC or A,B	80 nF	1000 mH	4 mH/Ω
Io, Isc	1.1 mA	IIB or C,E,F	640 nF	1000 mH	17 mH/Ω
Po	8 mW	IIA or D,G	2.1 µF	1000 mH	35 mH/Ω

Module 9116B2 Terminal 51-53		Group	Co	Lo	Lo/Ro
Uo, Voc	21.4 V	IIC or A,B	0.16 µF	1000 mH	4 mH/Ω
Io, Isc	1.1 mA	IIB or C,E,F	1.13 µF	1000 mH	17 mH/Ω
Po	8 mW	IIA or D,G	4.15 µF	1000 mH	35 mH/Ω

Module 9116B1 Terminal 51-52		Group	Co	Lo	Lo/Ro
Uo, Voc	8.3 V	IIC or A,B	7 µF	1000 mH	100 mH/Ω
Io, Isc	0.2 mA	IIB or C,E,F	73 µF	1000 mH	400 mH/Ω
Po	0.4 mW	IIA or D,G	1000 µF	1000 mH	800 mH/Ω
Module 9116B1 Terminal 41,42,43,44		Group	Co	Lo	Lo/Ro
Uo, Voc	8.3 V	IIC or A,B	7 µF	207 mH	1 mH/Ω
Io, Isc	13.1 mA	IIB or C,E,F	73 µF	828 mH	5 mH/Ω
Po	27.3 mW	IIA or D,G	1000 µF	1000 mH	10 mH/Ω

Module 9116B2 Terminal 51-52		Group	Co	Lo	Lo/Ro
Uo, Voc	8.3 V	IIC or A,B	7 µF	1000 mH	100 mH/Ω
Io, Isc	0.2 mA	IIB or C,E,F	73 µF	1000 mH	400 mH/Ω
Po	0.4 mW	IIA or D,G	1000 µF	1000 mH	800 mH/Ω
Module 9116B2 Terminal 41,42,43,44		Group	Co	Lo	Lo/Ro
Uo, Voc	8.3 V	IIC or A,B	7 µF	207 mH	1 mH/Ω
Io, Isc	13.1 mA	IIB or C,E,F	73 µF	828 mH	5 mH/Ω
Po	27.3 mW	IIA or D,G	1000 µF	1000 mH	10 mH/Ω

Installation notes:
In Class I, Division 2 installations, the subject equipment shall be mounted within a too-secured enclosure which is capable of accepting one or more of the Class I, Division 2 wiring methods specified in the the National Electrical Code (ANSI/NFPA 70) or Canadian Electrical Code (C22.1).
In Zone 2 installations, the subject equipment shall be mounted within a tool secured enclosure which is capable of accepting one or more of the Zone 2 wiring methods specified in the National Electrical Code (ANSI/NFPA 70) or the Canadian Electrical Code (C22.1). Where installed in outdoor or potentially wet locations, the enclosure shall, at a minimum, meet the requirements of IP54.
In Zone 2 installations, the installer shall ensure protection of supply terminals against transient voltages exceeding 140% of the rated supply voltage.
Install in environments rated Pollution Degree 2 or better; overvoltage category I or II.
The module must be supplied from a Power Supply having double or reinforced insulation.
The use of stranded wires is not permitted for mains wiring except when wires are fitted with cable ends.
For installation on the 9400 Power Rail the power must be supplied from Power Control Module Unit 9410.
The module is galvanic isolated and does not require grounding.
Use 60 / 75 ºC Copper Conductors with wire Size AWG: (26-14).
Warning: Substitution of components may impair intrinsic safety.
Warning: To prevent ignition of the explosive atmospheres, disconnect power before servicing and do not separate connectors when energized and an explosive gas mixture is present.
Warning: Do not mount or remove modules from the Power Rail when an explosive gas mixture is present.

LERBAKKEN 10, 8410 ROENDE DENMARK

Hazardous Classified Location
Class I/II/III, Division 1, Group A,B,C,D,E,F,G
or Class I, Zone 0/1 Group IIC, [AEx ia] IIC
or Group IIC, [Ex ia Ga] IIC Gc

Unclassified Location or
Hazardous Classified Location
Class I, Division 2, Group A,B,C,D T4
or Class I Zone 2 Group IIC T4 Gc

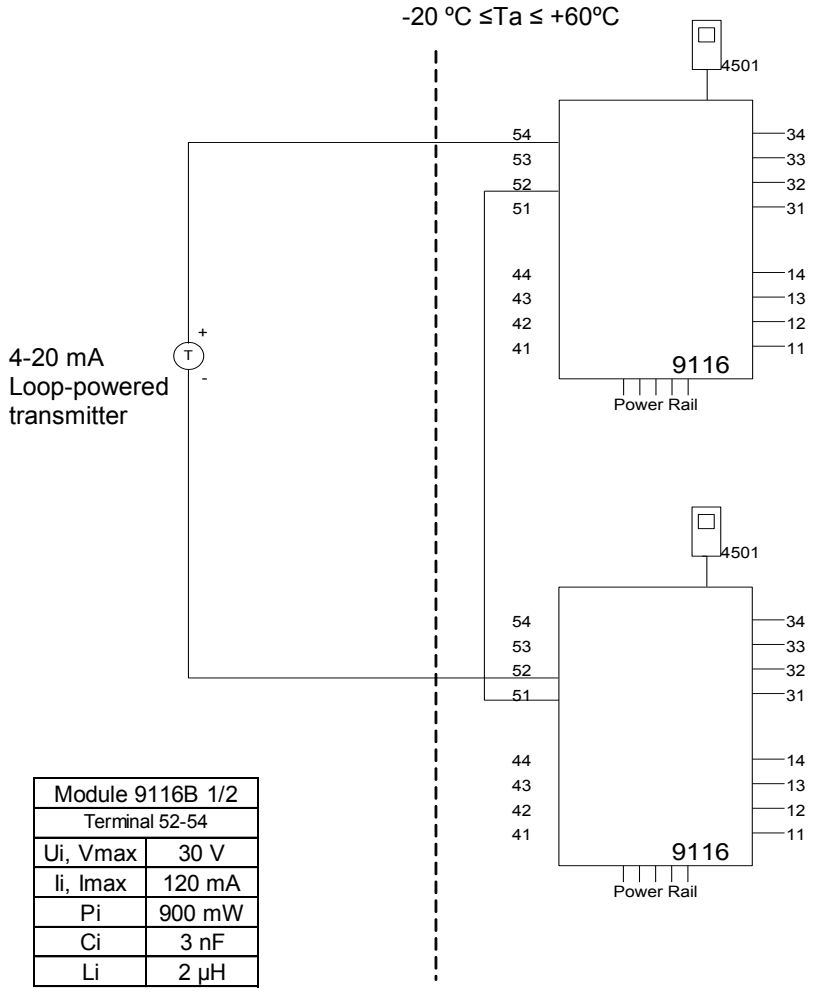

Status relay, terminal (33,34)

Non hazardous area installation
Voltage max: 125 VAC / 110 VDC
Power max: 62.5 VA / 32 W
Current max: 0.5 A AC / 0.3 ADC

Zone 2 installation:
Voltage max: 32 VAC/ 32 VDC
Power max: 16 VA / 32 W
Current max: 0.5 A AC / 1 A DC

Relay output, terminal (13,14)

Non hazardous area installation
Voltage max: 250 VAC / 30 VDC
Power max: 500 VA / 60 W
Current max: 2 A AC / 2 ADC

Zone 2 installation
Voltage max: 32 VAC / 30 VDC
Power max: 64 VA / 60 W
Current max: 2 A AC / 2 ADC

Module 9116B 1/2	
Terminal 52-54	
Ui, Vmax	30 V
Ii, Imax	120 mA
Pi	900 mW
Ci	3 nF
Li	2 µH

Module 9116B1 Terminals 52-54		Group	Co	Lo	Lo/Ro
Uo, Voc	28 V	IIC or A,B	80 nF	4 mH	54 µH/Ω
Io, Isc	93 mA	IIB or C,E,F	640 nF	16 mH	218 µH/Ω
Po	650 mW	IIA or D,G	2.1 µF	32 mH	436 µH/Ω

Module 9116B2 Terminal 52-54		Group	Co	Lo	Lo/Ro
Uo, Voc	21.4 V	IIC or A,B	0.16 µF	4 mH	54 µH/Ω
Io, Isc	93 mA	IIB or C,E,F	1.13 µF	16 mH	218 µH/Ω
Po	650 mW	IIA or D,G	4.15 µF	32 mH	436 µH/Ω

(terminal 11,12,13,14)
(terminal 31,32,33,34)
(terminal 91,92,93,94,95)
U_m: 253 V max. 400 Hz

LERBAKKEN 10, 8410 ROENDE DENMARK

Hazardous Classified Location
Class I/II/III, Division 1, Group A,B,C,D,E,F,G
or Class I, Zone 0/1 Group IIC, [AEx ia] IIC
or Group IIC, [Ex ia Ga] IIC Gc

Unclassified Location or
Hazardous Classified Location
Class I, Division 2, Group A,B,C,D T4
or Class I Zone 2 Group IIC T4 Gc

-20 ºC ≤Ta ≤ +60ºC

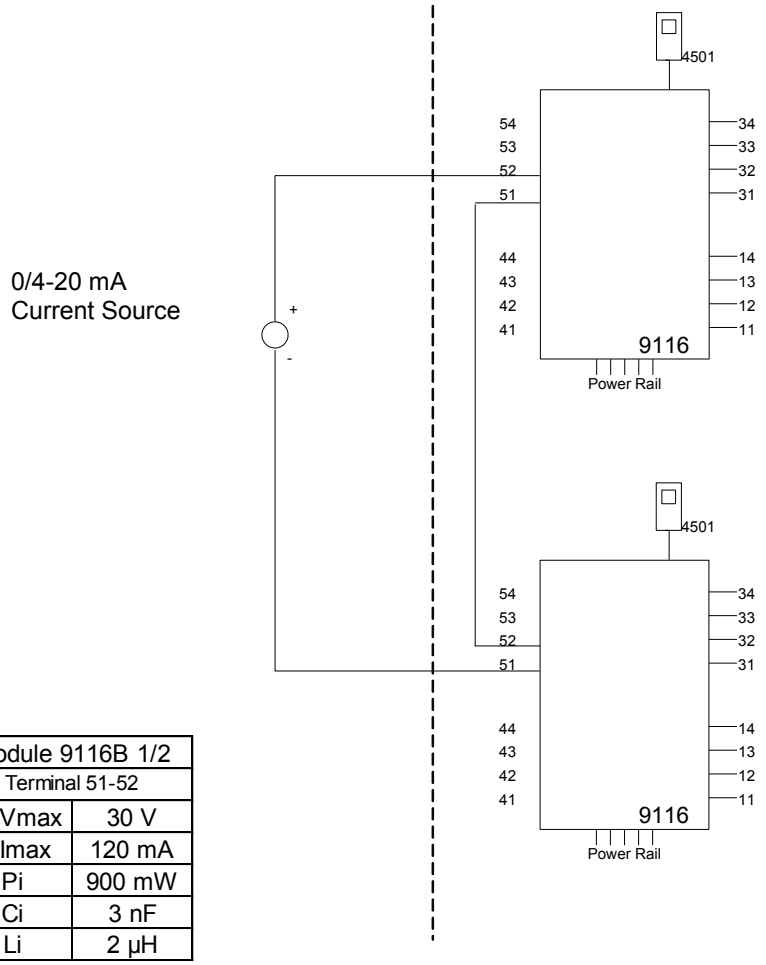

Status relay, terminal (33,34)

Unclassified location installation:
Voltage max: 125 VAC / 110 VDC
Power max: 62.5 VA / 32 W
Current max: 0.5 A AC / 0.3 ADC

Zone 2 installation:
Voltage max: 32 VAC/ 32 VDC
Power max: 16 VA / 32 W
Current max: 0.5 A AC / 1 A DC

Relay output, terminal (13,14)

Unclassified location installation:
Voltage max: 250 VAC / 30 VDC
Power max: 500 VA / 60 W
Current max: 2 A AC / 2 ADC

Zone 2 installation
Voltage max: 32 VAC / 30 VDC
Power max: 64 VA / 60 W
Current max: 2 A AC / 2 ADC

(terminal 11,12,13,14)
(terminal 31,32,33,34)
(terminal 91,92,93,94,95)
U_m: 253 V max. 400 Hz

Module 9116B 1/2	
Terminal 51-52	
Ui, Vmax	30 V
Ii, Imax	120 mA
Pi	900 mW
Ci	3 nF
Li	2 µH

Module 9116B 1/2 Terminals 51-52		Group	Co	Lo	Lo/Ro
Uo, Voc	16.6 V	IIC or A,B	0.4 µF	100 mH	25mH/Ω
Io, Isc	0.2 mA	IIB or C,E,F	2.3 µF	100 mH	100mH/Ω
Po	0.8 mW	IIA or D,G	9.5 µF	100 mH	200mH/Ω

LERBAKKEN 10, 8410 RØNDE DENMARK

INMETRO Desenhos para Instalação

Para instalação segura do 9116B. e 9116A. o manual seguinte deve ser observado. O módulo deve ser instalado somente por profissionais qualificados que estão familiarizados com as leis nacionais e internacionais, diretrizes e normas que se aplicam a esta área. Ano de fabricação pode ser obtido a partir dos dois primeiros dígitos do número de série

Para a instalação na Zona 2 o seguinte deve ser observado. O módulo de programação de 4501, deve ser utilizado apenas com os módulos PR electronics. É importante que o módulo esteja intacto e não tenha sido alterado ou modificado de qualquer maneira. Apenas os módulos 4501 livres de poeira e umidade devem ser instalados.

INMETRO Certificado …… DEKRA 23.0006X

Marcas: **9116B.**

[Ex ia Ga] IIC/IIB/IIA
[Ex ia Da] IIIC
[Ex ia Ma] I

Marcas: 9116B., 9116A. Ex ec nC IIC T4 Gc

Normas:

ABNT NBR IEC 60079-0:2020 Versão Corrigida:2023
ABNT NBR IEC 60079-7:2018 Versão Corrigida:2022
ABNT NBR IEC 60079-11:2013 Versão Corrigida:2017
ABNT NBR IEC 60079-15:2019

Instalação 9116B. :

Área de classificada
Zona 0, 1, 2, 20, 21 e 22

Área de não classificada
ou Zona 2

-20 ≤Ta ≤ +60ºC

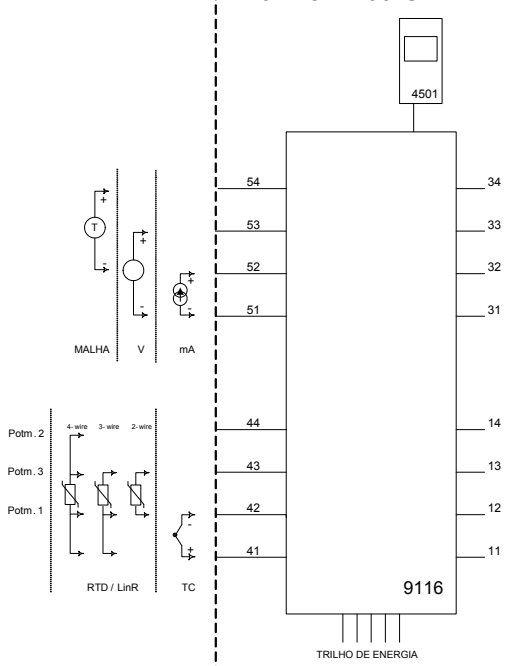

Supply terminais (31,32)
Voltagem: 19,2 – 31,2 VDC

Relê de estado, terminais (33,34)
Instalação em Zona 2:
Voltagem máx.: 32 VAC/ 32 VDC
Potência máx.: 16 VA / 32 W
Corrente máx.: 0,5 A AC / 1 A DC

Relê de estado, terminais (13,14)
Instalação em Zona 2:
Voltagem máx.: 32 VAC / 30 VDC
Potência máx.: 64 VA / 60 W
Corrente máx.:: 2 A AC / 2 ADC

(terminais 11,12,13,14)
(terminais 31,32,33,34)
(terminais 91,92,93,94,95)
U_m: 253 V; máx. 400 Hz

LERBAKKEN 10, 8410 RØNDE DENMARK

Module 9116B1	
Terminal 51-52, 51-53	
Ui	30 V
Ii	120 mA
Pi	900 mW
Ci	3 nF
Li	1 µH

Module 9116B2	
Terminal 51-52, 51-53	
Ui	30 V
Ii	120 mA
Pi	900 mW
Ci	3 nF
Li	1 µH

Module 9116B1 Terminal 51-54, 52-54		Group	Co	Lo	Lo/Ro
Uo	28 V	IIC	80 nF	4 mH	54 µH/Ω
Io	93 mA	IIB	640 nF	16 mH	218 µH/Ω
Po	650 mW	IIA	2.1 µF	32 mH	436 µH/Ω

Module 9116B2 Terminal 51-54, 52-54		Group	Co	Lo	Lo/Ro
Uo	21.4 V	IIC	0.16 µF	4 mH	54 µH/Ω
Io	93 mA	IIB	1.13 µF	16 mH	218 µH/Ω
Po	650 mW	IIA	4.15 µF	32 mH	436 µH/Ω

Module 9116B1 Terminal 51-53		Group	Co	Lo	Lo/Ro
Uo	28 V	IIC	80 nF	1000 mH	4 mH/Ω
Io	1.1 mA	IIB	640 nF	1000 mH	17 mH/Ω
Po	8 mW	IIA	2.1 µF	1000 mH	35 mH/Ω

Module 9116B2 Terminal 51-53		Group	Co	Lo	Lo/Ro
Uo	21.4 V	IIC	0.16 µF	1000 mH	4 mH/Ω
Io	1.1 mA	IIB	1.13 µF	1000 mH	17 mH/Ω
Po	8 mW	IIA	4.15 µF	1000 mH	35 mH/Ω

Module 9116B1 Terminal 51-52		Group	Co	Lo	Lo/Ro
Uo	8.3 V	IIC	7 µF	1000 mH	100 mH/Ω
Io	0.2 mA	IIB	73 µF	1000 mH	400 mH/Ω
Po	0.4 mW	IIA	1000 µF	1000 mH	800 mH/Ω
Module 9116B1 Terminal 41,42,43,44		Group	Co	Lo	Lo/Ro
Uo	8.3 V	IIC	7 µF	207 mH	1 mH/Ω
Io	13.1 mA	IIB	73 µF	828 mH	5 mH/Ω
Po	27.3 mW	IIA	1000 µF	1000 mH	10 mH/Ω

Module 9116B2 Terminal 51-52		Group	Co	Lo	Lo/Ro
Uo	8.3 V	IIC	7 µF	1000 mH	100 mH/Ω
Io	0.2 mA	IIB	73 µF	1000 mH	400 mH/Ω
Po	0.4 mW	IIA	1000 µF	1000 mH	800 mH/Ω
Module 9116B2 Terminal 41,42,43,44		Group	Co	Lo	Lo/Ro
Uo	8.3 V	IIC	7 µF	207 mH	1 mH/Ω
Io	13.1 mA	IIB	73 µF	828 mH	5 mH/Ω
Po	27.3 mW	IIA	1000 µF	1000 mH	10 mH/Ω

Notas de instalação:

Para o grupo I (minas), aplicam-se os parâmetros do grupo IIA.

Instalação em grau de poluição 2, categoria de sobretensão II conforme definido no IEC 60664-1.
Os circuitos não intrinsecamente seguros só pode ser connectado para sobretensão limitado ao categoria I/II como definido na IEC 60664-1.
Não separe conectores quando energizado ou quando uma mistura de gás explosivo estiver presente.
Não monte ou remova módulos do trilho de alimentação quando uma mistura de gás explosivo estiver presente.
Desligue a alimentação antes da manutenção.
A fiação de terminais sem uso não é permitida.

Em tipo de proteção [Ex ia Da] os parâmetros para a segurança intrínseca para grupo de gás IIB são aplicáveis.
Para a instalação em Zona 2, o módulo deve ser instalado em um invólucro conformidade com o tipo de proteção ‘Ex e’, fornecendo no mínimo grau de proteçao IP54.
Dispositivos de entrada de cabo e elementos de vedação devem cumprir com os mesmos requisitos.
Para a instalação de trilho de energia na Zona 2, apenas o trilho de alimentação Rail 9400 fornecido pela Unidade de Controle de Potência 9410 é permitido.

Máx. torque terminal de parafuso 0,5 Nm. O fio trançado deve ser instalado com um comprimento de isolamento de 5 mm ou através de um terminal isolado adequado, como um terminal de cadarço.

LERBAKKEN 10, 8410 RØNDE DENMARK

Instalação 9116B.

Área de classificada
Zona 0,1,2, 20, 21, 22

Área de não classificada
ou Zona 2

-20 ≤Ta ≤ +60ºC

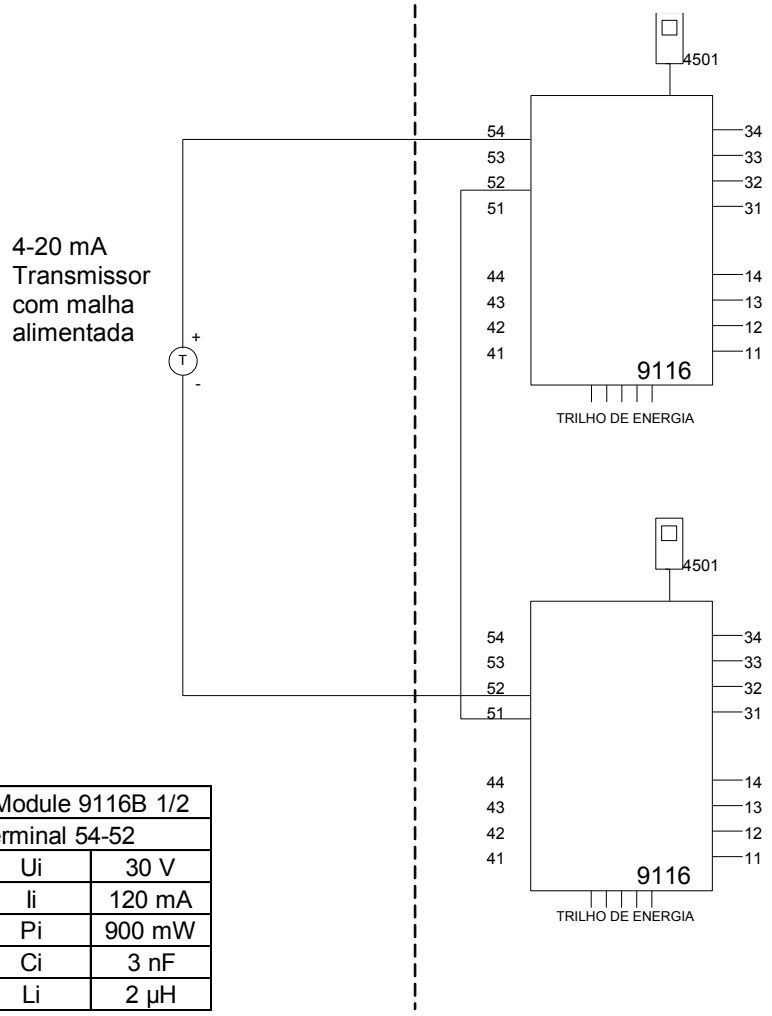

Supply terminais (31,32)
Voltagem: 19,2 – 31,2 VDC

Relê de estado, terminais (33,34)
Instalação em Zona 2:
Voltagem máx.: 32 VAC/ 32 VDC
Potência máx.: 16 VA / 32 W
Corrente máx.: 0,5 A AC / 1 A DC

Rele de estado, terminais (13,14)
Instalação em Zona 2:
Voltagem máx.: 32 VAC / 30 VDC
Potência máx.: 64 VA / 60 W
Corrente máx.:: 2 A AC / 2 ADC

(terminais 11,12,13,14)
(terminais 31,32,33,34)
(terminais 91,92,93,94,95)
U_m: 253 V; máx. 400 Hz

Module 9116B 1/2	
Terminal 54-52	
Ui	30 V
Ii	120 mA
Pi	900 mW
Ci	3 nF
Li	2 µH

Module 9116B1 Term. 54-52; 51-52		Group	Co	Lo	Lo/Ro
Uo	28 V	IIC	80 nF	4 mH	54 µH/Ω
Io	93 mA	IIB	640 nF	16 mH	218 µH/Ω
Po	650 mW	IIA	2.1 µF	32 mH	436 µH/Ω

Module 9116B2 Term. 54-52; 51-52		Group	Co	Lo	Lo/Ro
Uo	21.4 V	IIC	0.16 µF	4 mH	54 µH/Ω
Io	93 mA	IIB	1.13 µF	16 mH	218 µH/Ω
Po	650 mW	IIA	4.15 µF	32 mH	436 µH/Ω

LERBAKKEN 10, 8410 RØNDE DENMARK

Instalação 9116B.

Área de classificada
Zona 0, 1, 2, 20, 21, 22

Área de não classificada
ou Zona 2

-20 ≤Ta ≤ +60ºC

0/4-20 mA
Fonte de
Corrente

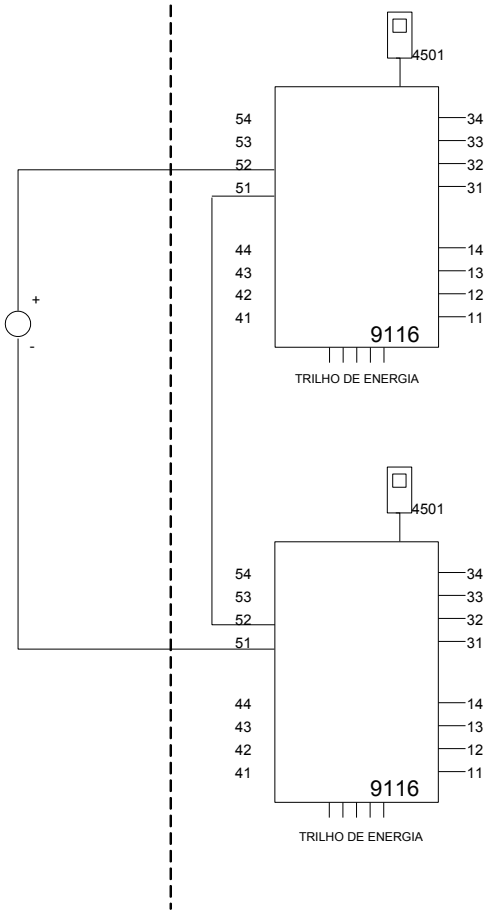

Supply terminais (31,32)
Voltagem: 19,2 – 31,2 VDC

Relê de estado, terminais (33,34)

Instalação em Zona 2:
Voltagem máx.: 32 VAC/ 32 VDC
Potência máx.: 16 VA / 32 W
Corrente máx.: 0,5 A AC / 1 A DC

Rele de estado, terminais (13,14)

Instalação em Zona 2:
Voltagem máx.: 32 VAC / 30 VDC
Potência máx.: 64 VA / 60 W
Corrente máx.:: 2 A AC / 2 ADC

(terminais 11,12,13,14)
(terminais 31,32,33,34)
(terminais 91,92,93,94,95)
U_m: 253 V máx. 400 Hz

Module 9116B 1/2	
Terminal 51-52	
Ui	30 V
Ii	120 mA
Pi	900 mW
Ci	3 nF
Li	2 µH

Module 9116B 1/2 Term. 52-51, 51-52		Group	Co	Lo	Lo/Ro
Uo	16.6 V	IIC	0.4 µF	100 mH	25mH/Ω
Io	0.2 mA	IIB	2.3 µF	100 mH	100mH/Ω
Po	0.8 mW	IIA	9.5 µF	100 mH	200mH/Ω

LERBAKKEN 10, 8410 RØNDE DENMARK

Instalação 9116A. :

Área de não classificada
ou Zona 2

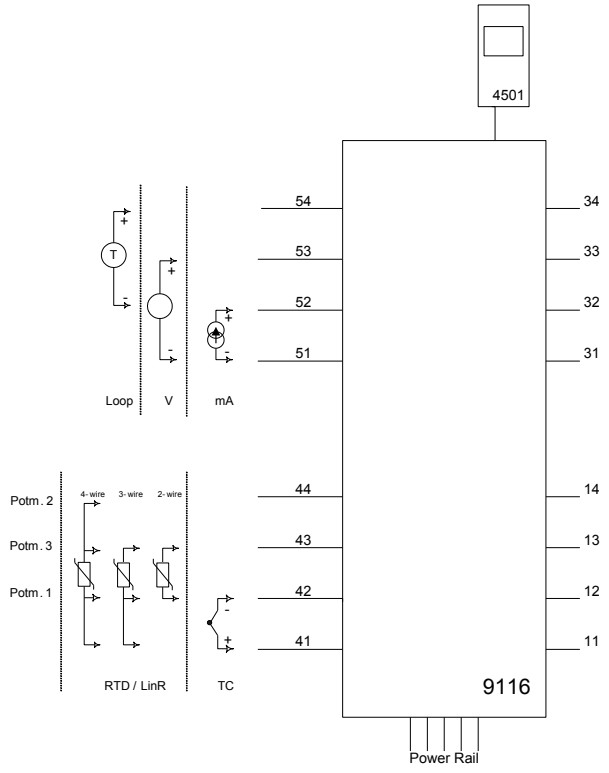

Supply terminais (31,32)
Voltagem: 19.2 – 31.2 VDC

Relê de estado, terminais (33,34)
Instalação em Zona 2:
Voltagem máx.: 32 VAC/ 32 VDC
Potência máx.: 16 VA / 32 W
Corrente máx.: 0,5 A AC / 1 A DC

Rele de estado, terminais (13,14)
Instalação em Zona 2:
Voltagem máx.: 32 VAC / 30 VDC
Potência máx.: 64 VA / 60 W
Corrente máx.:: 2 A AC / 2 ADC

Para instalação na Zona 2, o módulo deverá ser instalado em um invólucro no tipo de proteção Ex e, proporcionando um grau de proteção de pelo menos IP54. Os dispositivos de entrada de cabos e os elementos de obturação devem cumprir os mesmos requisitos.

Para instalação no Power Rail na Zona 2, somente o Power Rail tipo 9400 fornecido pela Unidade de Controle de Potência tipo 9410 (Certificado de Exame de Tipo IECEx KEM 08.0025X) é permitido.

O módulo de programação 4501 deve ser usado somente com módulos da PR Electronics. É importante que o módulo não esteja danificado e não tenha sido alterado ou modificado de forma alguma. Somente módulos 4501 livres de poeira e umidade deverão ser instalados.

Document history

The following list provides notes concerning revisions of this document.

Rev. ID	Date	Notes
107	1848	Release of the 9116xx-EMP version.
108	2049	9116A-version included in manual. CCOE approval discontinued. New FM certificate and installation drawing.
109	2103	Routing diagram updated.
110	2301	ATEX and IECEx approvals updated - Ex nA changed to Ex ec. UKEX approval added.
111	2407	ATEX / UKEX installation drawing updated - UKEX certificate for 9116B-EMP added. INMETRO approval updated - Ex nA replaced by Ex ec.
112	2436	CCC approval added. New EAC Ex certificate.
113	2634	Status relay function clarified.

We are near you, *all over the world*

Our trusted red boxes are supported wherever you are

All our devices are backed by expert service and a 5-year warranty. With each product you purchase, you receive personal technical support and guidance, day-to-day delivery, repair without charge within the warranty period and easily accessible documentation.

We are headquartered in Denmark, and have offices and authorized partners the world over. We are a local business with a global reach. This means that we are always nearby and know your local markets well.
We are committed to your satisfaction and provide PERFORMANCE MADE SMARTER all around the world.

For more information on our warranty program, or to meet with a sales representative in your region, visit prelectronics.com.

Benefit today from
PERFORMANCE MADE SMARTER

PR electronics is the leading technology company specialized in making industrial process control safer, more reliable and more efficient. Since 1974, we have been dedicated to perfecting our core competence of innovating high precision technology with low power consumption. This dedication continues to set new standards for products communicating, monitoring and connecting our customers' process measurement points to their process control systems.

Our innovative, patented technologies are derived from our extensive R&D facilities and from having a great understanding of our customers' needs and processes. We are guided by principles of simplicity, focus, courage and excellence, enabling some of the world's greatest companies to achieve PERFORMANCE MADE SMARTER.