PERFORMANCE
MADE
SMARTER

# Product manual
# *9116-EMP*
# *Universal converter, EMPHASIS-assessed*

TEMPERATURE | I.S. INTERFACES | COMMUNICATION INTERFACES | MULTIFUNCTIONAL | ISOLATION | DISPLAY

No. 9116-EMPV112-UK
Serial no.: 241710320-261605728

PR electronics

# 6 Product Pillars
# *to meet your every need*

## Individually outstanding, unrivalled in combination

With our innovative, patented technologies, we make signal conditioning smarter and simpler. Our portfolio is composed of six product areas, where we offer a wide range of analog and digital devices covering over a thousand applications in industrial and factory automation. All our products comply with or surpass the highest industry standards, ensuring reliability in even the harshest of environments and have a 5-year warranty for greater peace of mind.

Temperature

Our range of temperature transmitters and sensors provides the highest level of signal integrity from the measurement point to your control system. You can convert industrial process temperature signals to analog, bus or digital communications using a highly reliable point-to-point solution with a fast response time, automatic self-calibration, sensor error detection, low drift, and top EMC performance in any environment.

I.S. Interface

We deliver the safest signals by validating our products against the toughest safety standards. Through our commitment to innovation, we have made pioneering achievements in developing I.S. interfaces with SIL 2 Full Assessment that are both efficient and cost-effective. Our comprehensive range of analog and digital intrinsically safe isolation barriers offers multifunctional inputs and outputs, making PR an easy-to-implement site standard. Our backplanes further simplify large installations and provide seamless integration to standard DCS systems.

Communication

We provide inexpensive, easy-to-use, future-ready communication interfaces that can access your PR installed base of products. All the interfaces are detachable, have a built-in display for readout of process values and diagnostics, and can be configured via push-buttons. Product specific functionality includes communication via Modbus and Bluetooth and remote access using our PR Process Supervisor (PPS) application, available for iOS and Android.

Multifunction

Our unique range of single devices covering multiple applications is easily deployable as your site standard. Having one variant that applies to a broad range of applications can reduce your installation time and training, and greatly simplify spare parts management at your facilities. Our devices are designed for long-term signal accuracy, low power consumption, immunity to electrical noise and simple programming.

Isolation

Our compact, fast, high-quality 6 mm isolators are based on microprocessor technology to provide exceptional performance and EMC-immunity for dedicated applications at a very low total cost of ownership. They can be stacked both vertically and horizontally with no air gap separation between units required.

Display

Our display range is characterized by its flexibility and stability. The devices meet nearly every demand for display readout of process signals and have universal input and power supply capabilities. They provide a real-time measurement of your process value no matter the industry and are engineered to provide a user-friendly and reliable relay of information, even in demanding environments.

# Universal converter, EMPHASIS-assessed 9116-EMP

# Table of contents


Warning . . . 4
Symbol identification . . . 4
Safety instructions . . . 4
Marking . . . 5
How to demount system 9000 . . . 6
Mounting the PR 4500 communication interfaces . . . 6
Advanced features . . . 7
Application . . . 7
Technical characteristics . . . 7
Applications - 9116Ax-EMP . . . 8
Applications - 9116Bx-EMP . . . 9
Order . . . 10
Accessories . . . 10
Electrical specifications . . . 10
Configuration of sensor error check . . . 15
  Input signal outside range . . . 15
  Sensor error detection . . . 15
Error indications . . . 16
Connections . . . 17
Block diagram . . . 18
Signal error and cable fault indications without display front . . . 19
Configuration / operating the function keys . . . 20
Routing diagram . . . 23
Routing diagram, advanced settings (ADV.SET) . . . 25
Help text overview . . . 26
Graphic depiction of window . . . 28
Graphic depiction of setpoint . . . 29
IECEx Installation Drawing . . . 30
ATEX / UKEX Installation Drawing . . . 35
FM Installation Drawing . . . 40
Desenho de instalaçao INMETRO . . . 44
Document history . . . 49

## Warning

The following operations should only be carried out on a disconnected device and under ESD-safe conditions:

General mounting, wire connection and disconnection.
Troubleshooting the device.

**Repair of the device and replacement of circuit breakers must be done by PR electronics A/S only.**

## Warning

Do not open the front plate of the device as this will cause damage to the connector for the display / programming front PR 4500.
This device contains no DIP-switches or jumpers.

## Symbol identification

**Triangle with an exclamation mark:** Warning/demand. Potentially lethal situations. Read the manual before installation and commissioning of the device in order to avoid incidents that could lead to personal injury or mechanical damage.

**The CE mark** proves the compliance of the device with the essential requirements of the EU-directives.

**The UKCA mark** proves the compliance of the device with the essential requirements of the UK regulations.

**The double insulation symbol** shows that the device is protected by double or reinforced insulation.

**Ex** devices have been approved acc. to the ATEX directive for use in connection with installations in explosive areas. See installation drawings in appendix.

## Safety instructions

### Definitions

**Hazardous voltages** have been defined as the ranges: 75 to 1500 Volt DC, and 50 to 1000 Volt AC.
**Technicians** are qualified persons educated or trained to mount, operate, and also trouble-shoot technically correct and in accordance with safety regulations.
**Operators**, being familiar with the contents of this manual, adjust and operate the knobs or potentiometers during normal operation.

### Receipt and unpacking

Unpack the device without damaging it and check whether the device type corresponds to the one ordered. The packing should always follow the device until this has been permanently mounted.

### Environment

Avoid direct sun light, dust, high temperatures, mechanical vibrations and shock, and rain and heavy moisture. If necessary, heating in excess of the stated limits for ambient temperatures should be avoided by way of ventilation.
The device must be installed in pollution degree 2 or better.
The device is designed to be safe at least under an altitude up to 2 000 m.
The device is designed for indoor use.

## Mounting

Only technicians, who are familiar with the technical terms, warnings, and instructions in the manual and who are able to follow these, should connect the device. Should there be any doubt as to the correct handling of the device, please contact your local distributor or, alternatively,

**PR electronics A/S**
**www.prelectronics.com**

The use of stranded wires is not permitted for mains wiring except when wires are fitted with cable ends.

Stranded wire should be installed with an insulation stripping length of 5 mm or via a suitable insulated terminal such as a bootlace ferrule.

Descriptions of input / output and supply connections are shown in the block diagram and on the side label.

The device must be supplied from a Power Supply with electrical protection feature SELV or otherwise confirmed to have double or reinforced insulation. A power switch shall be easily accessible and close to the device. The power switch shall be marked as the disconnecting unit for the device.

For installation on Power Rail 9400 the power is supplied by Power Control Unit 9410.

Year of manufacture can be taken from the first two digits in the serial number.

## Calibration and adjustment

During calibration and adjustment, the measuring and connection of external voltages must be carried out according to the specifications of this manual. The technician must use tools and instruments that are safe to use.

## Normal operation

Operators are only allowed to adjust and operate devices that are safely fixed in panels, etc., thus avoiding the danger of personal injury and damage. This means there is no electrical shock hazard, and the device is easily accessible.

## Cleaning

When disconnected, the device may be cleaned with a cloth moistened with distilled water.

## Liability

To the extent the instructions in this manual are not strictly observed, the customer cannot advance a demand against PR electronics A/S that would otherwise exist according to the concluded sales agreement.

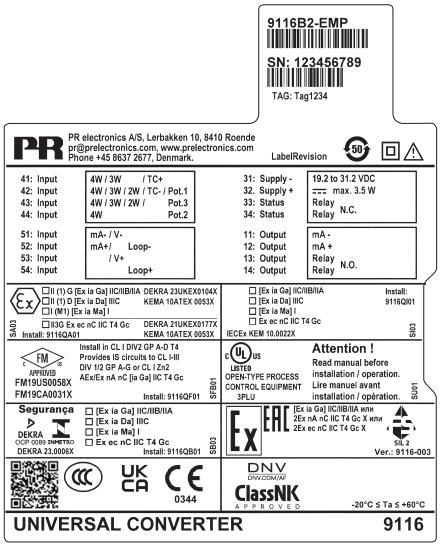


# Marking

When this product has been installed as Ex ia or / and ec, use a permanent marker in the appropriate box to indicate the type of installation on the label.

# How to demount system 9000

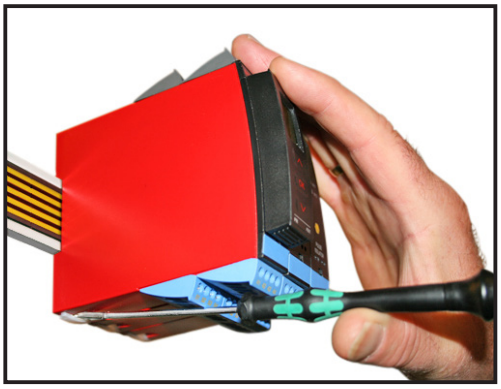

**Picture 1:**
By lifting the bottom lock, the device is detached from the DIN rail.

### Mounting the PR 4500 communication interfaces

1: Insert the tabs of the PR 4500 into the slots at the top of the device.
2: Hinge the PR 4500 down until it snaps into place.

### Demounting of the PR 4500 communication interfaces

3: Push the release button on the bottom of the PR 4500 and hinge the PR 4500 out and up.
4: With the PR 4500 hinged up, remove from the slots at the top of the device.

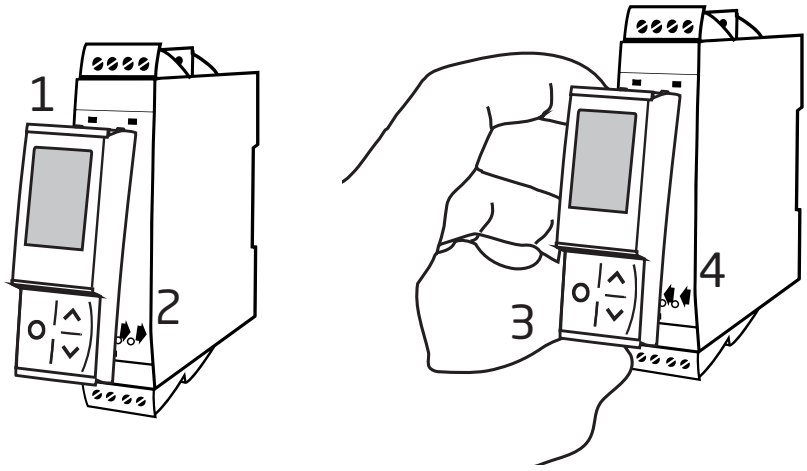

# Universal converter, EMPHASIS-assessed
# 9116-EMP

- Input for RTD, TC, Ohm, potentiometer, mA and V
- Supply for 2-wire transmitters
- Active / passive mA output and relay output
- EMPHASIS-assessed instrument for nuclear industry
- SIL 2-certified via Full Assessment

### Advanced features

- Configuration and monitoring by way of detachable display front (PR 4500); process calibration, signal and relay simulation.
- Advanced relay configuration, e.g. setpoint, window, delay, sensor error indication and power monitoring
- Copying of the configuration from one device to others of the same type via the display front.
- Reduced Uo Ex data < 8.3 V for active input signals.
- TC inputs with internal or external CJC for higher accuracy.
- Active / passive mA output via the same two terminals.

### Application

- 9116Ax-EMP can be mounted in the safe area or in zone 2 / Class I, Division 2, Groups A, B, C, D.
- 9116Bx-EMP can be mounted in the safe area or in zone 2 / Class 1, Division 2 and receive signals from zone 0, 1, 2 and zone 20, 21, 22 including mining / Class I/II/III, Division 1, Gr. A-G.
- Conversion and scaling of temperature, voltage, potentiometer and linear resistance signals.
- Power supply and signal isolator for 2-wire transmitters.
- Monitoring of error events and cable breakage via the individual status relay and/or a collective electronic signal via the power rail.
- The 9116-EMP has been designed, developed and certified for use in SIL 2 applications according to the requirements of IEC 61508.
- Failure rates for 9116-EMP correspond to Performance Level “d” according to ISO-13849.

### Technical characteristics

- 1 green and 1 red front LED indicate operation status and malfunction. 1 yellow LED indicates relay status.
- 2.6 kVAC galvanic isolation between input, output and supply.
- Can be supplied separately or installed on power rail, PR 9400.

# Applications - 9116Ax-EMP

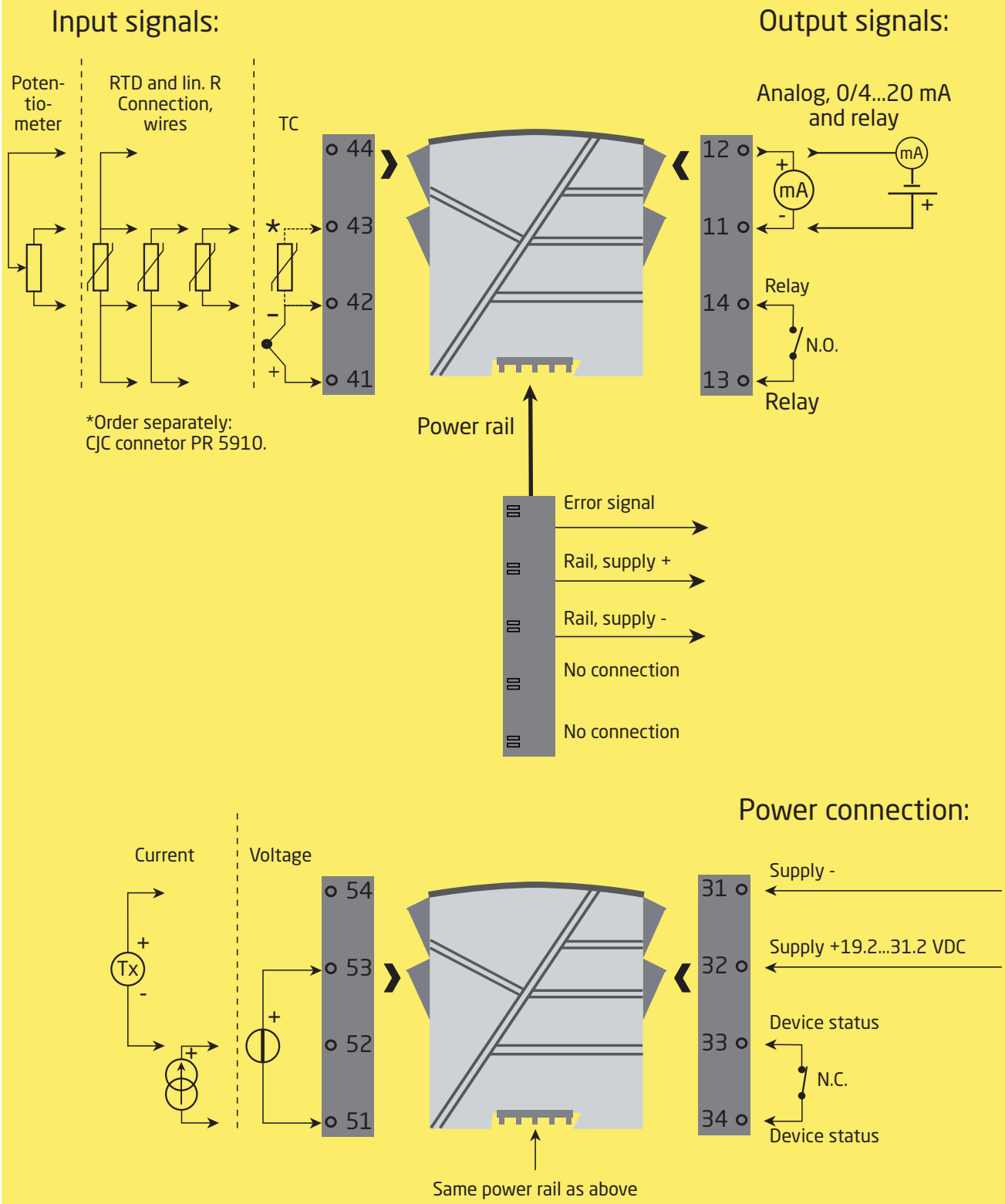


***Zone 2 & Cl. 1, Div. 2, gr. A-D***
***or Safe Area***

# Applications - 9116Bx-EMP

## Input signals:

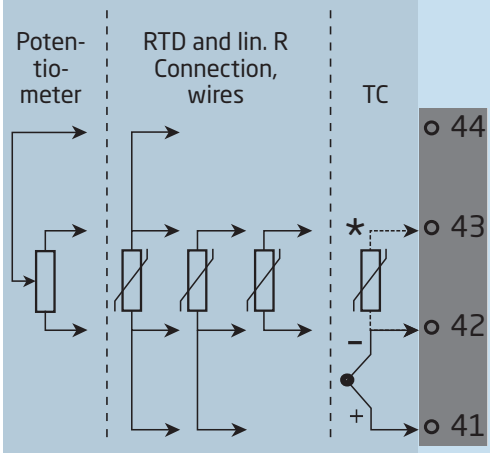


*Order separately:
CJC connetor PR 5910Ex.

## Output signals:

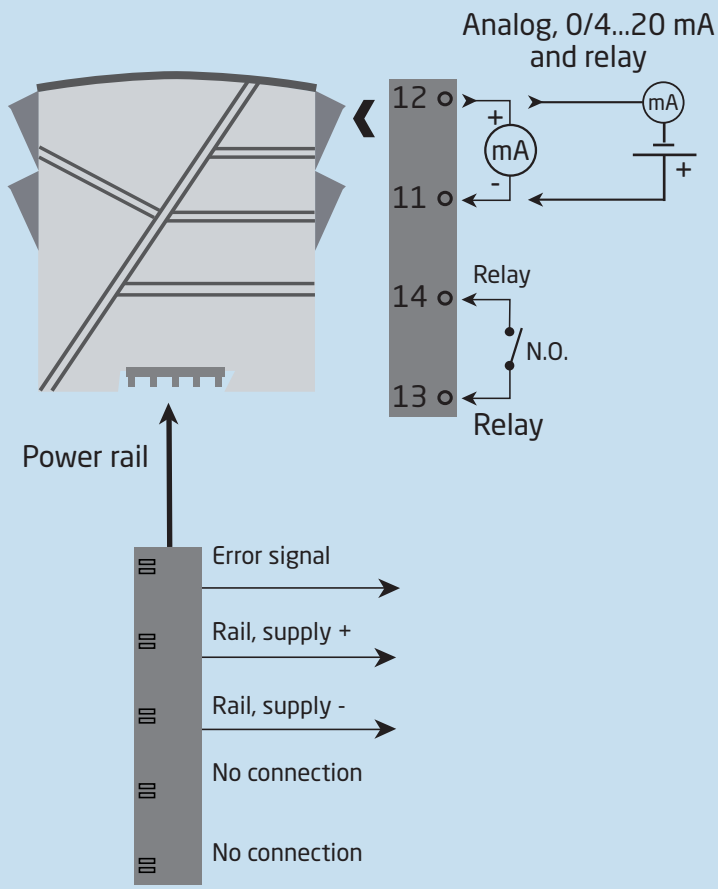


## Power connection:

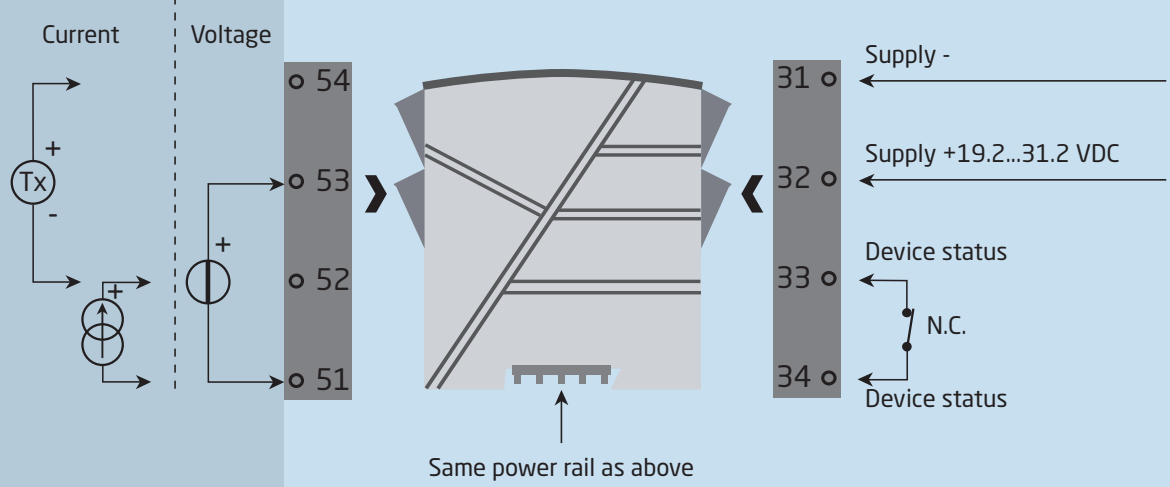


***Zone 0, 1, 2, 20, 21, 22, M1 & Cl. I/II/III, Div. 1 gr. A-G***

***Zone 2 & Cl. 1, Div. 2, gr. A-D or Safe Area***

## Order

| Type | Associated apparatus | | Max. loop voltage | | EMPHASIS-assessed |
|---|---|---|---|---|---|
| **9116** | No | : A | Uo 28 VDC | : 1 | -EMP |
| | Yes | : B | Uo 21.4 VDC | : 2 | |

**Example: 9116B2-EMP**

## Accessories

**4510 = Display / programming front**
**4511 = Modbus communication enabler**
**4512 = Bluetooth communication enabler**
**5910 = CJC connector for 9116Ax-EMP**
**5910Ex = CJC connector for 9116Bx-EMP**
**9400 = Power rail**
**9404 = Module stop for rail**
**9410 = Power control unit**
**9421 = Power supply 24 V - Ex ec nC**

## Electrical specifications

### Environmental conditions

Operating temperature . . . . . -20°C to +60°C
Storage temperature . . . . . -20°C to +85°C
Calibration temperature . . . . . 20...28°C
Relative humidity . . . . . < 95% RH (non-cond.)
Protection degree . . . . . IP20
Installation in . . . . . Pollution degree 2 & overvoltage category II.

### Mechanical specifications

Dimensions (HxWxD) . . . . . 109 x 23.5 x 104 mm
Dimensions (HxWxD) w/ PR 4500 . . . . . 109 x 23.5 x 131 mm
Weight approx. . . . . 185 g
DIN rail type . . . . . DIN EN 60715 - 35 mm
Wire size . . . . . 0.13...2.08 $mm^2$ / AWG 26...14 stranded wire
Stripping length . . . . . 5 mm
Screw terminal torque . . . . . 0.5 Nm
Vibration . . . . . IEC 60068-2-6
2...13.2 Hz . . . . . ±1 mm
13.2...100 Hz . . . . . ±0.7 g

### Common electrical specifications

Supply voltage . . . . . 19.2...31.2 VDC
Fuse . . . . . 1.25 A SB / 250 VAC

| Type | Description | Max. power dissipation | Max. required power |
|---|---|---|---|
| 9116x1-EMP | 1 channel (Ex Uo 28 V) | ≤ 1.7 W | ≤ 2.1 W |
| 9116x2-EMP | 1 channel (Ex Uo 21.4 V) | ≤ 1.7 W | ≤ 2.1 W |

*Max. required power is the maximum power needed at terminals 31 and 32.*
*Max. power dissipation is the maximum power dissipated by the device.*
*If the 9116-EMP is used with the PR 4500, then add 40 mW to the max. power dissipation and 70 mW to the max. required power for each device with the PR 4500.*

Isolation - test / working:
Input to any . . . . . 2.6 kVAC / 300 VAC reinforced isolation
Analog output to supply . . . . . 2.6 kVAC / 300 VAC reinforced isolation
Output relay to analog output . . . . . 1.5 kVAC / 150 VAC reinforced isolation or 300 VAC basic isolation
Status relay to supply . . . . . 1.5 kVAC / 150 VAC reinforced isolation
Communications interface . . . . . PR 4500
Signal dynamics, input / output . . . . . 24 bit / 16 bit
Signal / noise ratio . . . . . Min. 60 dB (0...100 kHz)
Response time (0...90%, 100...10%):
Temperature input, programmable . . . . . 1...60 s
mA / V input, programmable . . . . . 0.4...60 s
Accuracy, the greater of the general and basic values:

| General values | | |
|---|---|---|
| Input type | Absolute accuracy | Temperature coefficient |
| All | ≤ ±0.1% of span | ≤ ±0.01% of span / °C |

| Basic values | | |
|---|---|---|
| Input type | Basic accuracy | Temperature coefficient |
| mA | ≤ ±16 µA | ≤ ±1.6 µA / °C |
| Volt | ≤ ±20 µV | ≤ ±2 µV / °C |
| Pt100, Pt200, Pt 1000 | ≤ ±0.2°C | ≤ ±0.02°C/°C |
| Pt500, Ni100, Ni120, Ni 1000 | ≤ ±0.3°C | ≤ ±0.03°C/°C |
| Pt50, Pt400, Ni50 | ≤ ±0.4°C | ≤ ±0.04°C/°C |
| Pt250, Pt300 | ≤ ±0.6°C | ≤ ±0.06°C/°C |
| Pt20 | ≤ ±0.8°C | ≤ ±0.08°C/°C |
| Pt10 | ≤ ±1.4°C | ≤ ±0.14°C/°C |
| TC type: E, J, K, L, N, T, U | ≤ ±1°C | ≤ ±0.1°C/°C |
| TC type: R, S, W3, W5, LR | ≤ ±2°C | ≤ ±0.2°C/°C |
| TC type: B 160...400°C | ≤ ±4.5°C | ≤ ±0.45°C/°C |
| TC type: B 400...1820°C | ≤ ±2°C | ≤ ±0.2°C/°C |

EMC - immunity influence. . . . . < ±0.5% of span
Extended EMC immunity:
NAMUR NE 21, A criterion, burst . . . . . < ±1% of span

Auxiliary supplies for 9116x1-EMP:
2-wire supply (terminal 54...52) . . . . . 28...16.5 VDC / 0...20 mA
Auxiliary supplies for 9116x2-EMP:
2-wire supply (terminal 54...52) . . . . . 21.4...16.5 VDC / 0...20 mA

**RTD, linear resistance and potentiometer input**

Input for RTD types:
Pt10*, Pt20*, Pt50*, Pt100, Pt200, Pt250, Pt300, Pt400, Pt500, Pt1000
Ni50, Ni100, Ni120, Ni1000

| Input type | Min. value | Max. value | Standard |
|---|---|---|---|
| Pt100 | -200°C | +850°C | IEC 60751 |
| Ni100 | -60°C | +250°C | DIN 43760 |
| Linear resist. | 0 Ω | 10000 Ω | - |
| Potentiometer | 10 Ω | 10000 Ω | - |

Cable resistance per wire (max.), RTD . . . . . 50 Ω
Sensor current; RTD . . . . . Nom. 0.2 mA
Effect of sensor cable resistance (3- / 4-wire), RTD . . . . . < 0.002 Ω / Ω
Sensor error detection, RTD . . . . . Programmable ON / OFF
Short circuit detection, RTD . . . . . Yes
* No short circuit detection for Pt10, Pt20 and Pt50
* No short circuit detection for Lin. R_0%≤ app. 18 Ω

**TC input**

| Type | Min. value | Max. value | Standard |
|---|---|---|---|
| B | 0°C | +1820°C | IEC 60584-1 |
| E | -100°C | +1000°C | IEC 60584-1 |
| J | -100°C | +1200°C | IEC 60584-1 |
| K | -180°C | +1372°C | IEC 60584-1 |
| L | -200°C | +900°C | DIN 43710 |
| N | -180°C | +1300°C | IEC 60584-1 |
| R | -50°C | +1760°C | IEC 60584-1 |
| S | -50°C | +1760°C | IEC 60584-1 |
| T | -200°C | +400°C | IEC 60584-1 |
| U | -200°C | +600°C | DIN 43710 |
| W3 | 0°C | +2300°C | ASTM E988-90 |
| W5 | 0°C | +2300°C | ASTM E988-90 |
| LR | -200°C | +800°C | GOST 3044-84 |

Cold junction compensation (CJC):
via external sensor in connector 5910. . . . . 20...28°C ≤ ±1°C
-20...20°C and 28...70°C ≤ ±2°C
via internal CJC sensor . . . . . ±(2.0°C + 0.4°C * Δt)
Δt = internal temperature - ambient temperature
Sensor error detection . . . . . Programmable ON or OFF
(only wire breakage)
Sensor error current:
when detecting . . . . . Nom. 2 µA
else. . . . . 0 µA

**Current input**

Measurement range . . . . . 0...23 mA
Programmable measurement ranges . . . . . 0...20 and 4...20 mA
Input resistance . . . . . Nom. 20 Ω + PTC 50 Ω
Sensor error detection:
Loop break 4...20 mA . . . . . Yes
NB: Only when input is selected as 4...20 mA

**Voltage input**

Measurement range . . . . . 0...12 VDC
Programmable measurement ranges . . . . . 0...1 / 0.2...1 / 0...5 / 1...5 / 0...10 and 2...10 VDC
Input resistance . . . . . Nom. >10 MΩ

**Current output**

| | |
|---|---|
| Signal range (span) | 0...23 mA |
| Programmable signal ranges | 0...20 / 4...20 / 20...0 and 20...4 mA |
| Load | ≤ 600 Ω |
| Load stability | ≤ 0.01% of span / 100 Ω |
| Sensor error detection | 0 / 3.5 / 23 mA / none |
| NAMUR NE 43 Upscale / Downscale | 23 mA / 3.5 mA |
| Output limitation: | |
| on 4...20 and 20...4 mA signals | 3.8...20.5 mA |
| on 0...20 and 20...0 mA signals | 0...20.5 mA |
| Current limit | ≤ 28 mA |

**Passive 2-wire output installation**

| | |
|---|---|
| Max. external 2-wire supply | 26 VDC |
| Max. load resistance [Ω] | (Vsupply - 3.5) / 0.023 A |
| Effect of external 2-wire supply voltage variation | < 0.005% of span / V |

**Relay output in safe area**

| | |
|---|---|
| Relay functions | Setpoint, Window, Sensor error, Power and Off |
| Hysteresis, in % of span / display range | 0.1...25 / 1...25 |
| On and Off delay | 0...3600 s |
| Sensor error reaction | Break / Make / Hold |
| Max. voltage | 250 VAC / VDC |
| Max. AC current | 2 A |
| Max. AC power | 500 VA |
| Max. DC current, resistive load: | |
| @ $U_{relay}$ ≤ 30 VDC | 2 ADC |
| @ $U_{relay}$ >30 VDC | [$1380 \times U_{relay}^{-2} \times 1.0085^{U_{relay}}$] ADC |

Graphic depiction of [$1380 \times U_{relay}^{-2} \times 1.0085^{U_{relay}}$]:

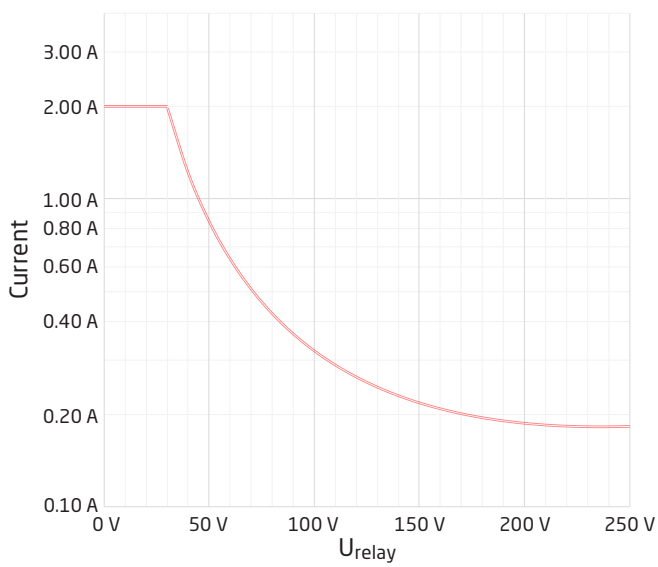


**Status relay in safe area**

| | |
|---|---|
| Max. voltage | 125 VAC / 110 VDC |
| Max. current | 0.5 AAC / 0.3 ADC |
| Max. AC power | 62.5 VA / 32 W |

**of span** = of the currently selected measurement range

**Observed authority requirements**

| | |
|---|---|
| EMC | 2014/30/EU & UK SI 2016/1091 |
| ATEX | 2014/34/EU & UK SI 2016/1107 |
| LVD | 2014/35/EU & UK SI 2016/1101 |
| RoHS | 2011/65/EU & UK SI 2012/3032 |
| EAC | TR-CU 020/2011 |
| EAC LVD | TR-CU 004/2011 |
| EAC Ex | TR-CU 012/2011 |

**Approvals**

| | |
|---|---|
| DNV-GL, Ships & Offshore | TAA00000JD |
| ClassNK | TA24034M |
| c UL us, UL 61010-1 | E314307 |

**I.S. / Ex**

| | |
|---|---|
| ATEX | KEMA 10ATEX0053 X |
| IECEx | IECEx KEM 10.0022X |
| UKEX | DEKRA 21UKEX0177 X / DEKRA 23UKEX0104X |
| c FM us | FM19US0058X / FM19CA0031X |
| INMETRO | DEKRA 23.0006X |
| CCC | 2024322316005917 |
| EAC Ex | EAEU KZ 7500361.01.01.08756 |

**Functional Safety**

SIL 2 Certified & Fully Assessed acc. to IEC 61508

# Configuration of sensor error check

| Sensor error check: | | |
|---|---|---|
| Device: | Configuration | Sensor error detection: |
| 9116 | ERR.ACT=NONE - OUT.ERR=NONE. | OFF |
| | Else: | ON |

# Visualisation in the PR 4500 of:

# Input signal outside range

| Outside range readout (IN.LO, IN.HI):<br>If the valid range of the A/D converter or the polynomal is exceeded | | | |
|---|---|---|---|
| Input | Range | Readout | Limit |
| VOLT | 0...1 V / 0.2...1 V | IN.LO | < -25 mV |
| | | IN.HI | > 1.2 V |
| | 0...10 V / 2...10 V | IN.LO | < -25 mV |
| | | IN.HI | > 12 V |
| CURR | 0...20 mA / 4...20 mA | IN.LO | < -1.05 mA |
| | | IN.HI | > 25.05 mA |
| LIN.R | 0...800 Ω | IN.LO | < -10 Ω |
| | | IN.HI | > 900 Ω |
| | 0...10 kΩ | IN.LO | <-10 Ω |
| | | IN.HI | > 11 kΩ |
| POTM | 0 - 100% | IN.LO | < -0.5 % |
| | | IN.HI | > 100.5 % |
| TEMP | TC / RTD | IN.LO | < temperature range -2°C |
| | | IN.HI | > temperature range +2°C |

| Display readout below min. / above max. (-1999, 9999): | | | |
|---|---|---|---|
| Input | Range | Readout | Limit |
| All | All | -1999 | Display readout <-1999 |
| | | 9999 | Display readout >9999 |

# Sensor error detection

| Sensor error detection (SE.BR, SE.SH): | | | |
|---|---|---|---|
| Input | Range | Readout | Condition |
| CURR | Loop break (4...20 mA) | SE.BR | <= 3.6 mA; > = 21 mA |
| POTM | All, SE.BR on all 3-wire | SE.BR | Sensor broken |
| | | SE.SH | Sensor shorted |
| LIN.R | All | SE.BR | Sensor broken or wire resistance too high |
| | For Lin. R_0%≥ app. 18 Ω | SE.SH | Sensor shorted |
| TEMP | All | SE.BR | Sensor broken or wire resistance too high |
| | Pt100 to Pt1000 and Ni50 to Ni1000 | SE.SH | Sensor shorted |

# Error indications

| Readout at hardware error | | |
|---|---|---|
| Error search | Readout | Cause |
| CJC sensor error - check device temperature | CJ.ER | Defect internal CJC sensor or CJC temperature out of allowed range** |
| CJC connector error - check CJC-connector block | CJ.ER | Defect (or missing) CJC-connector or temperature out of allowed range** |
| Input error - check input connection and reset power | IN.ER | Signal levels on input beyond limits or connected to wrong terminals* |
| Output error - check output connections and reset power | AO.ER | Error in analogue output current (SIL mode only)* |
| No communication | NO.CO | No communication with (PR 4500) |
| Flash memory error - check configuration | FL.ER<br>CO.ER | FLASH error (configuration invalid)*** |
| Invalid configuration type or version | TY.ER | Configuration read from EEprom has invalid type or rev. no. |
| Hardware error | RA.ER | RAM error* |
| Hardware error | IF.ER | Internal Flash error* |
| Hardware error | SW.ER | SW monitor error* |
| Hardware error | AD.ER | A/D converter error* |
| Hardware error | AO.SU | Analog output supply error* |
| Hardware error | CA.ER | Factory calibration error* |
| Hardware error | CM.ER | Main CPU error* |
| Hardware error | RE.ER | Relay readback error* |
| Hardware error | II.ER | Initialisation check error* |
| Hardware error | RS.ER | Reset error* |
| Hardware error | IC.ER | Input communication error* |
| Hardware error | M1.ER | Main CPU to Ch. 1 error* |
| Hardware error | MC.ER | Main CPU config. error* |
| Hardware error | MF.ER | Main CPU Flash error* |
| Hardware error | MR.ER | Main CPU RAM error* |
| Hardware error | MS.ER | Main CPU supply error* |
| Hardware error | MP.ER | Main CPU ProgFlow error* |
| Hardware error | MI.ER | Main CPU initialization check error* |
| Hardware error | DE.ER | Device error* |
| Hardware error | FC.ER | Invalid code checksum in PR 4500 |

| | |
|---|---|
| ! | All error indications in the display flash once per second. The help text explains the error. If the error is a sensor error, the display backlight flashes as well - this is acknowledged (stopped) by pushing the OK button. |
| * | Error is acknowledged by resetting the device power. |
| ** | Error can be disregarded by selecting input type different than TC. |
| *** | Error is acknowledged by stepping through the basic setup. |

# Connections

Power rail connections

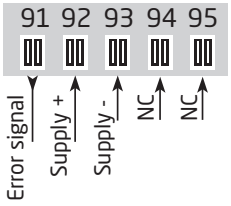


Supply and status relay

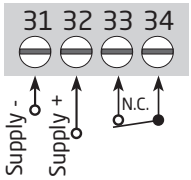


NC = no connection

## Inputs:

RTD, 2-wire

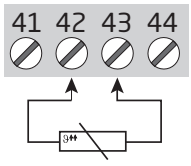


RTD, 3- / 4-wire

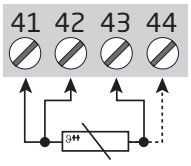


TC, internal CJC sensor

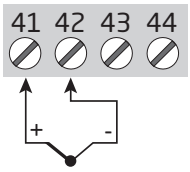


*TC, CJC connector

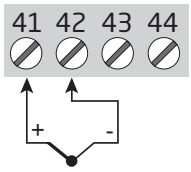


* Order separately: CJC connector 5910 / 5910Ex

Resistance, 2-wire

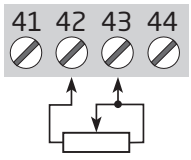


Resistance, 3- / 4-wire

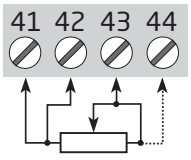


Potentiometer

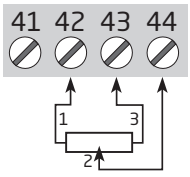


2-wire transmitter

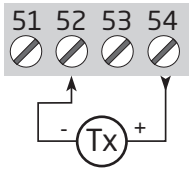


Current

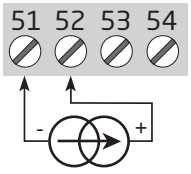


Voltage

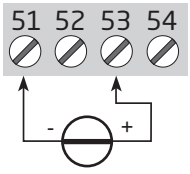


## Outputs:

Current (Active output)

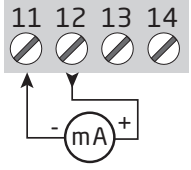


2-wire transmitter (Passive output)

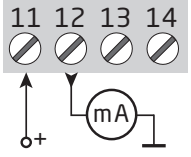


Relay

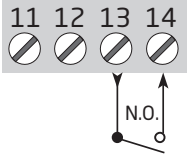

# Block diagram

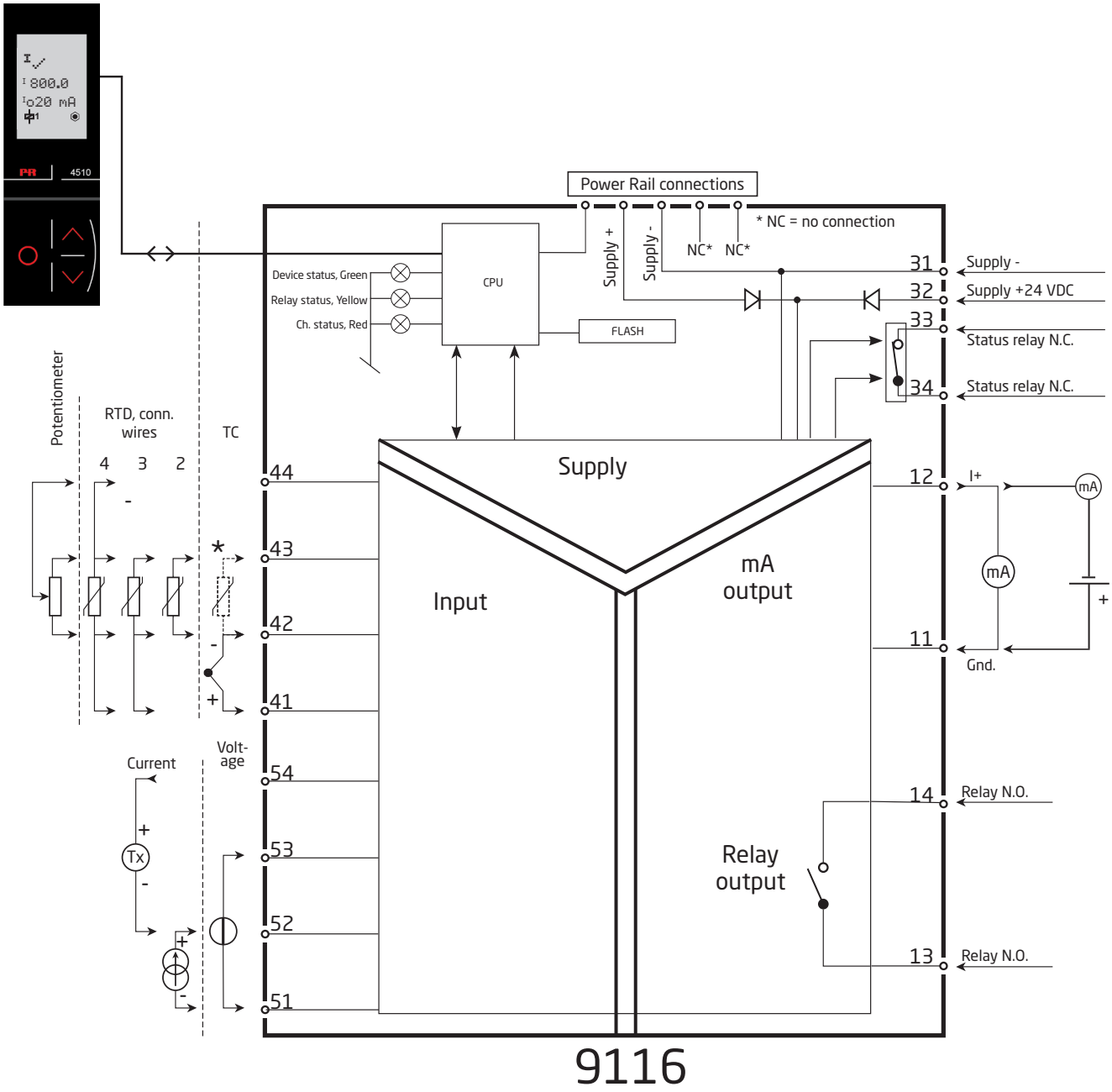

# Signal error and cable fault indications without display front

| List of LED and error signal indications | | | | | |
|---|---|---|---|---|---|
| **Condition** | **Green LED** | **Relay: Yellow LED** | **Error: Red LED** | **Status relay, N.C.** | **Power rail signal status** |
| No supply | OFF | OFF | OFF | De-energized | Closed |
| Device defective | OFF | | ON | De-energized | Closed |
| Device OK | Flashing | | | Energized | Open |
| Signal OK | Flashing | | OFF | Energized | Open |
| Output relay energized | Flashing | ON | OFF | Energized | Open |
| Output relay energized w. wire short/break | Flashing | ON | Flashing | De-energized | Closed (if activateded) |
| Output relay de-energized w. wire short/break | Flashing | OFF | Flashing | De-energized | Closed (if activateded) |
| Output relay de-energized | Flashing | OFF | OFF | Energized | Open |

# Configuration / operating the function keys

Documentation for routing diagram.

### In general

When configuring the 9116-EMP, you will be guided through all parameters and you can choose the settings which fit the application. For each menu there is a scrolling help text which is automatically shown in line 3 on the display.

Configuration is carried out by use of the 3 function keys:

- ⌃ will increase the numerical value or choose the next parameter
- ⌄ will decrease the numerical value or choose the previous parameter
- OK will save the chosen value and proceed to the next menu

When configuration is completed, the display will return to the default state 1.0. Pressing and holding OK will return to the previous menu or return to the default state (1.0) without saving the changed values or parameters.

If no key is activated for 1 minute, the display will return to the default state (1.0) without saving the changed values or parameters.

### Further explanations

**Password protection:** Programming access can be blocked by assigning a password. The password is saved in the device in order to ensure a high degree of protection against unauthorised modifications to the configuration. If the configured password is not known, please contact PR electronics support - www.prelectronics.com/contact.
Password protection is mandatory in SIL applications.

### Selection of units

After choosing the input signal type you can choose which process units should be shown in the display (see table). By selection of temperature input the process value is always displayed in Celsius or Fahrenheit. This is selected in the menu point after selection of temperature input.

### CJC

In the CJC menu you can choose between CJC connector and internal cold junction compensation. The CJC connecter (PR 5910 / PR 5910Ex) must be ordered separately.

### Signal and sensor error indication via display front PR 4500

Sensor error (see limits in the table) is displayed as SE.BR (sensor break) or SE.SH (sensor short). Signals outside the selected range (not sensor error, see table for limits) are displayed as IN.LO indicating low input signal or IN.HI indicating high input signal. The error indication is displayed as text in line 1 and at the same time the backlight flashes. Line 4 of the display is a status line which shows whether the device is SIL-locked (static dot = SIL-locked and flashing dot = not SIL-locked) as well as relay status and status for communication COM (running circle) indicating correct functioning of the PR 4500.

### Signal and sensor error indication without display front

Status of the unit can also be read from the 3 LEDs in the front of the device.

Green flashing LED indicates normal operation.
No light in the green LED indicates lack of supply voltage or error in the device.
Steady red LED indicates fatal error.
Flashing red LED indicates sensor error.

### Relay functions

5 different settings of relay function can be selected.

| | |
|---|---|
| **Setpoint:** | The unit works as a single trip amplifier |
| **Window:** | The relay has a window that is defined by a low and a high setpoint. On both sides of the window the relay has the same status. |
| **Error function:** | The relay is activated by sensor error. |
| **Power:** | The relay is activated as long as the power is on. |
| **Off:** | The relay is deactivated. |

**Increasing/decreasing:** The relay can be set to activate at increasing or decreasing input signal.

**Delay:** An ON and an OFF delay can be set in the range 0...3600 s.

**Hysteresis:** A hysteresis can be set at 0.1...25% of the span or between 1 and 25% of display range.

**Window:** The window function is selected by choosing "window" in the menu and defining a high and a low setpoint.
See the graphic depiction of the window functions on page 28.

**Setpoint:** The setpoint function is selected by choosing "setpoint" in the menu and entering the desired limit. The device then works as a single limit switch.
See the graphic depiction of the setpoint functions on page 29.

An activated relay means that the contact is closed if the contact function "normally open" is selected, and the contact is open if the contact function "normally closed" is selected.
The delay time for activation and deactivation can be set independently of each other in the menus ON.DEL and OFF DEL respectively.

## Advanced functions

The unit gives access to a number of advanced functions which can be reached by answering "Yes" to the point "ADV.SET".

**Display setup:** Here you can adjust the brightness contrast and the backlight. Setup of TAG numbers with 5 alphanumerics. Input value is always shown in line 2. Selection of functional readout in line 3 of the display - choose between readout of analog output or tag no or alternating display.

**Two-point process calibration:** The device can be process-calibrated in 2 points to fit a given input signal . A low input signal (not necessarily 0%) is applied and the actual value is entered via PR 4500. Then a high signal (not necessarily 100%) is applied and the actual value is entered via PR 4500. If you accept to use the calibration, the device will work according to this new adjustment. If you later reject this menu point or choose another type of input signal the device will return to factory calibration.
For initial activation of process calibration both Calibration Low and Calibration High must be performed.

**Process simulation function:** In the menu point "EN.SIM" it is possible to simulate an input signal by means of the arrow keys and thus control the output signal up or down or the relay state OFF and ON. You must exit the menu by pressing OK (no time-out).
The simulation function exits automatically, if the PR 4500 is detached.

**Password:** Here you can choose a password between 0000 and 9999 in order to protect the unit against unauthorised modifications to the configuration. The unit is delivered default without password.

**Memory:** In the memory menu you can save the configuration of the device in the PR 4500, and then move the PR 4500 onto another device of the same type and download the configuration in the new device.
Calibration parameters and relay latch status (where applicable) are device-specific and will not be included in the saved configuration.

**Language:** In the menu "LANG" you can choose between 7 different language versions of help texts that will appear in the menu. You can choose between UK, DE, FR, IT, ES, SE and DK.

**Power rail:** In the menu "RAIL" you can choose if sensor errors are transmitted to the central surveillance in the PR 9410 power control unit.

**Safety Integrity Level (SIL)**: See Safety Manual for details.

PR SIL2 IEC 61508 CERTIFIED Full assessment

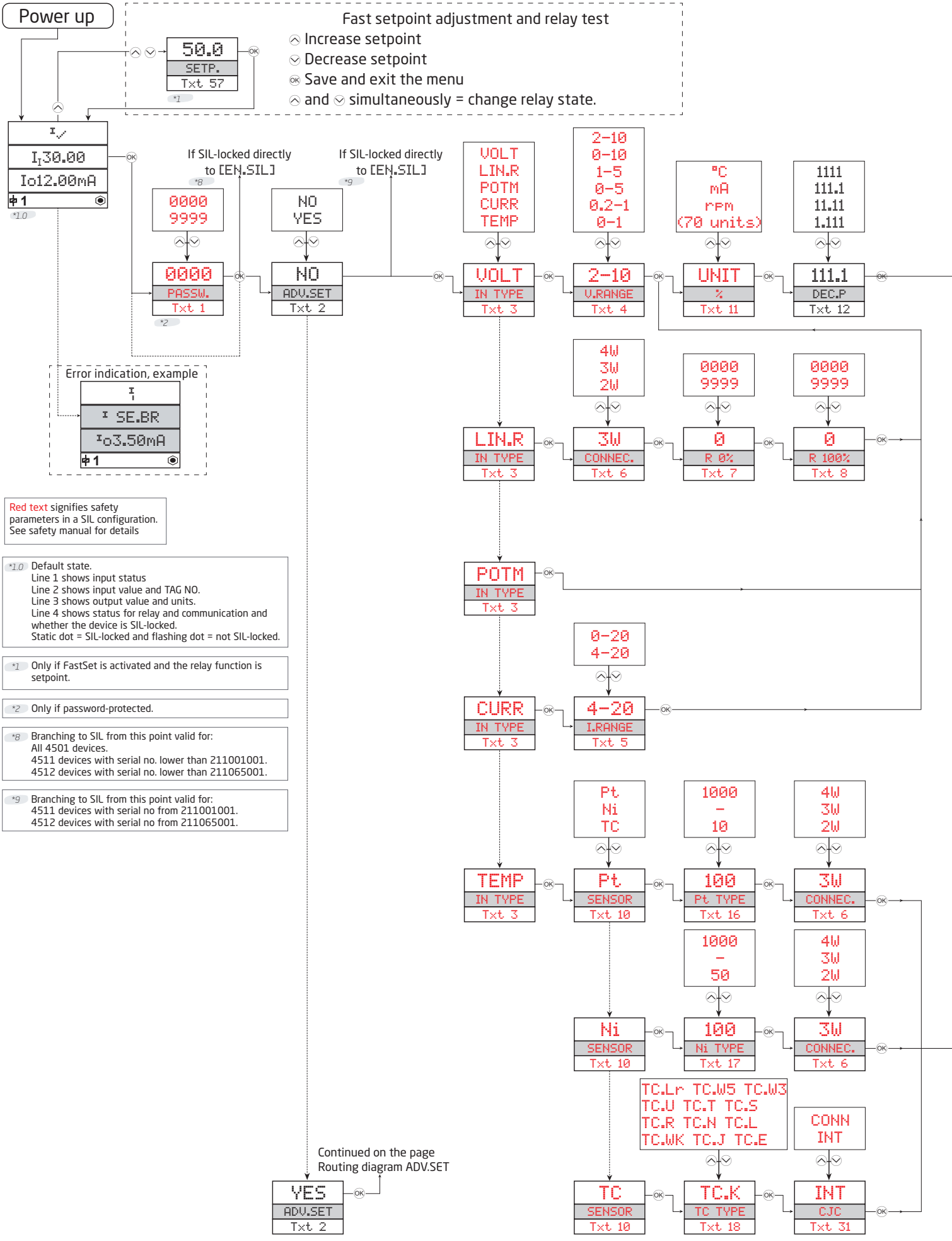


Red text signifies safety parameters in a SIL configuration. See safety manual for details

*1.0 Default state.
Line 1 shows input status
Line 2 shows input value and TAG NO.
Line 3 shows output value and units.
Line 4 shows status for relay and communication and whether the device is SIL-locked.
Static dot = SIL-locked and flashing dot = not SIL-locked.

*1 Only if FastSet is activated and the relay function is setpoint.

*2 Only if password-protected.

*8 Branching to SIL from this point valid for:
All 4501 devices.
4511 devices with serial no. lower than 211001001.
4512 devices with serial no. lower than 211065001.

*9 Branching to SIL from this point valid for:
4511 devices with serial no from 211001001.
4512 devices with serial no from 211065001.

# Routing diagram

If no key is activated for 1 minute, the display will return to the default state 1.0 without saving configuration changes.
⌃ Increase value / choose next parameter
⌄ Decrease value / choose previous parameter
OK Save the chosen value and proceed to the next menu
Hold OK Back to previous menu / return to menu 1.0 without saving.

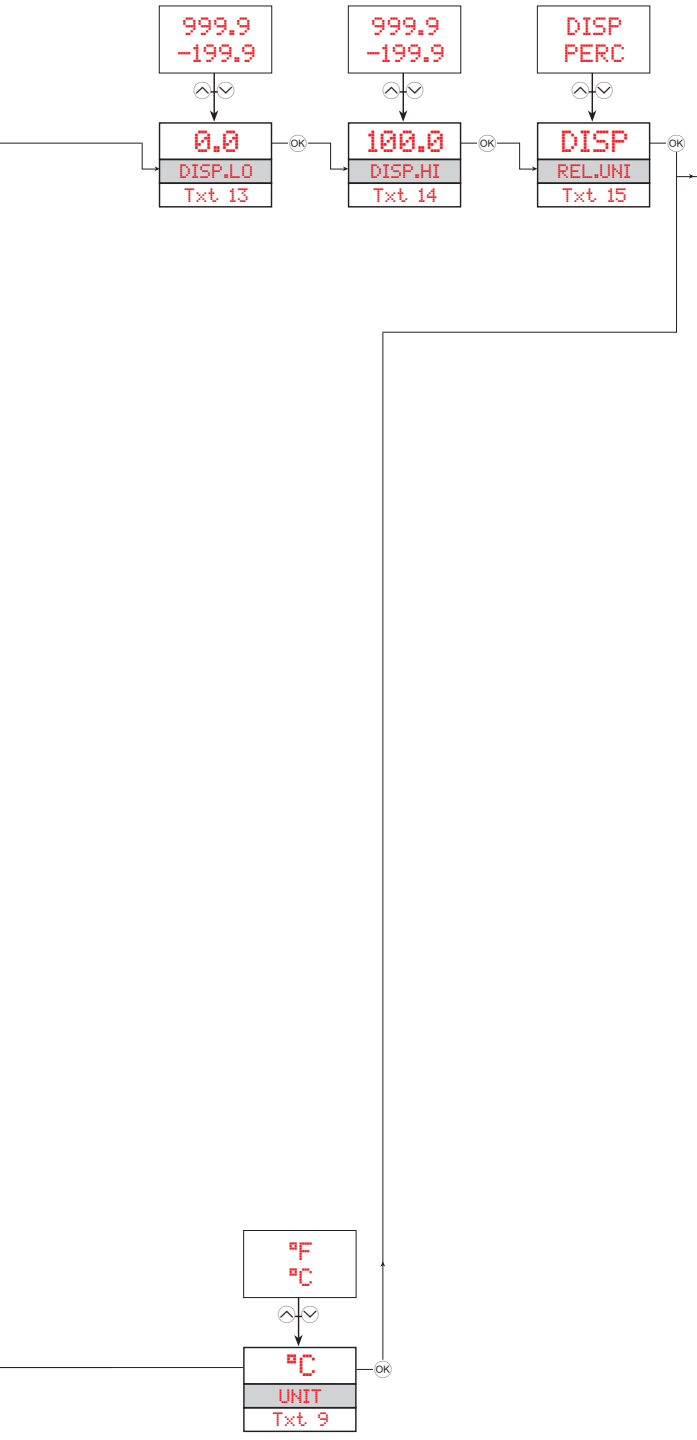


Continued on the next page

Selectable UNITS:

| | | | | |
|---|---|---|---|---|
| @C | s | rpm | MWh | ohm |
| @F | min | Hz | kWh | S |
| K | m/s | t | W | uS |
| % | mm/s | kg | GW | m3/min |
| m | m/min | g | MW | m3/h |
| cm | m/h | N | kW | l/s |
| mm | in/s | Pa | hp | l/min |
| um | ips | MPa | A | l/h |
| ft | ft/s | kPa | kA | gal/min |
| in | in/min | hPa | mA | gal/h |
| mils | ft/min | bar | uA | t/h |
| yd | in/h | mbar | V | mol |
| m3 | ft/h | kJ | kV | pH |
| l | m/s2 | Wh | mV | [blank] |

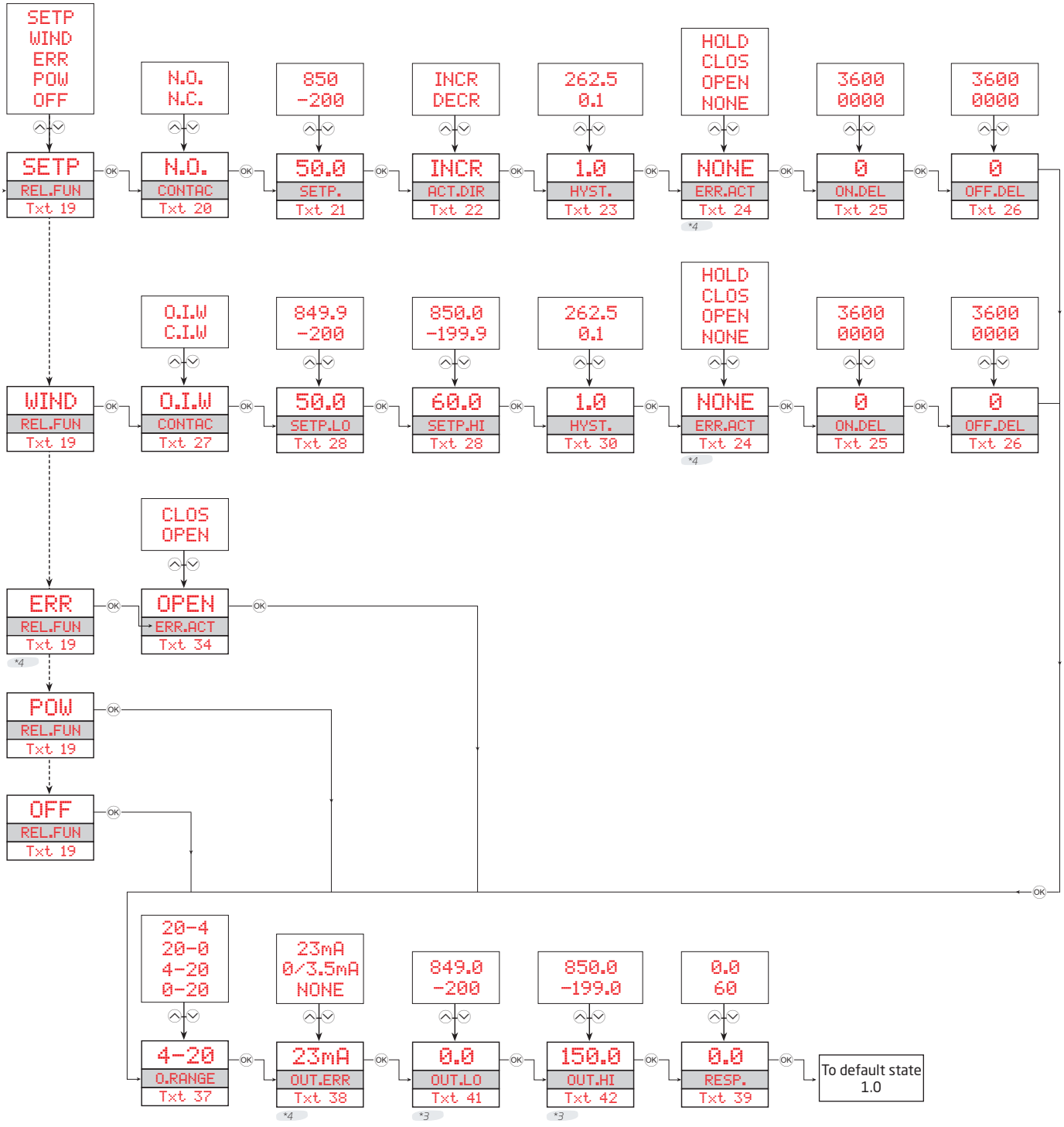


*3 Only if input signal is temperaure.

*4 Only if input types support sensor error check.
Not valid for these input signals: 0...20 mA and voltage.

*6 If password has been set.

*10 Not available on PR 4500 if SIL-locked.
Only for 4512 devices with serial no. from 211065001 and for 4511 devices with serial no. from 211001001.

# Routing diagram, advanced settings (ADV.SET)

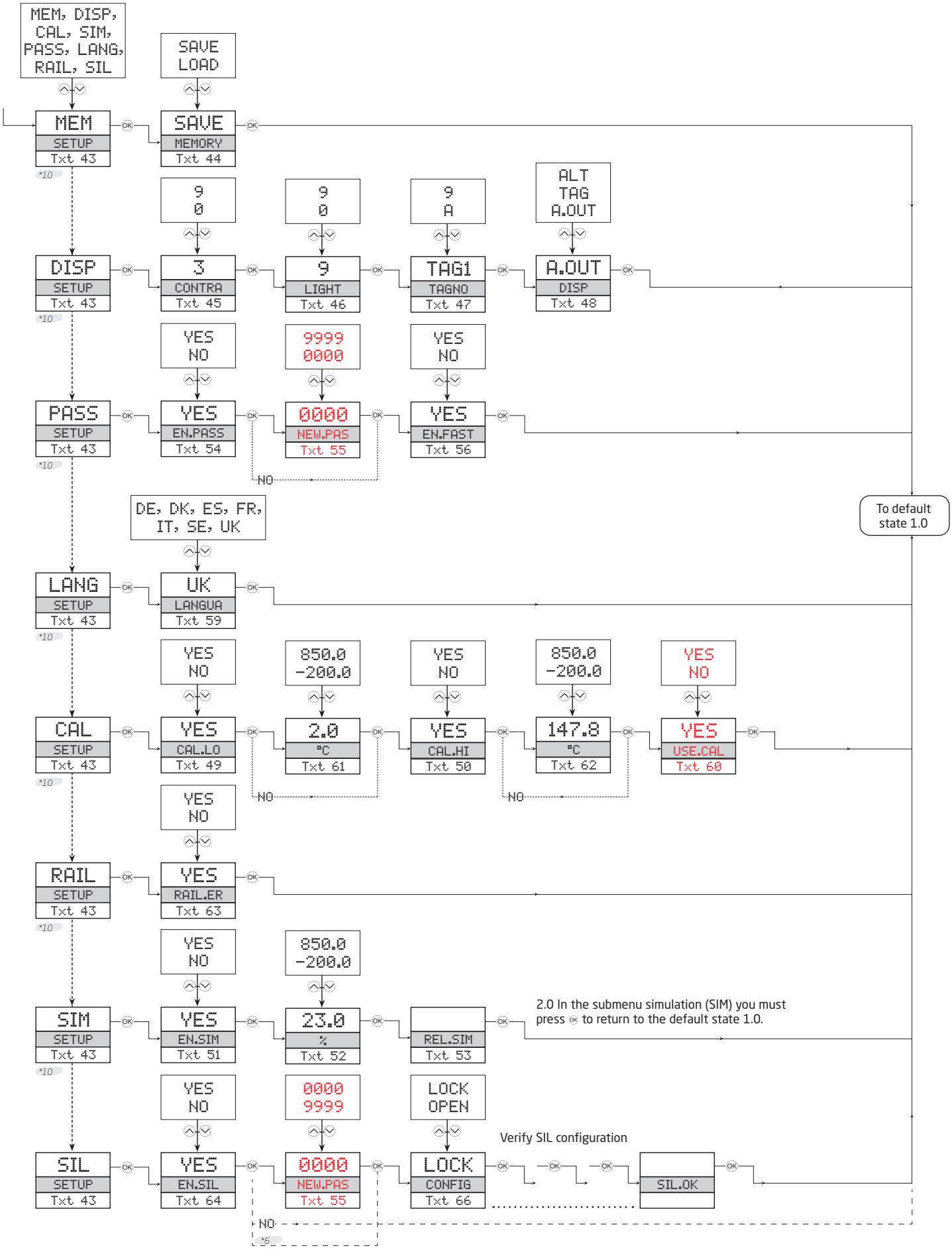

# Help text overview

[01] Set correct password
[02] Enter Advanced setup menu?
[03] Select Temperature input
Select Potentiometer input
Select Linear resistance input
Select Current input
Select Voltage input
[04] Select 0.0-1 V input range
Select 0.2-1 V input range
Select 0-5 V input range
Select 1-5 V input range
Select 0-10 V input range
Select 2-10 V input range
[05] Select 0-20 mA input range
Select 4-20 mA input range
[06] Select 2-Wire sensor connection
Select 3-Wire sensor connection
Select 4-Wire sensor connection
[07] Set Resistance value low
[08] Set Resistance value high
[09] Select Celsius as temperature unit
Select Fahrenheit as temperature unit
[10] Select TC sensor type
Select Ni sensor type
Select Pt sensor type
[11] Select Display unit
[12] Select Decimal point position
[13] Set Display range low
[14] Set Display range high
[15] Select Relay setpoint in % of input range
Select Relay setpoint in display units
[16] Select Pt10 sensor type
Select Pt20 sensor type
Select Pt50 sensor type
Select Pt100 sensor type
Select Pt200 sensor type
Select Pt250 sensor type
Select Pt300 sensor type
Select Pt400 sensor type
Select Pt500 sensor type
Select Pt1000 sensor type
[17] Select Ni50 sensor type
Select Ni100 sensor type
Select Ni120 sensor type
Select Ni1000 sensor type
[18] Select TC-B sensor type
Select TC-E sensor type
Select TC-J sensor type
Select TC-K sensor type
Select TC-L sensor type
Select TC-N sensor type
Select TC-R sensor type
Select TC-S sensor type
Select TC-T sensor type
Select TC-U sensor type
Select TC-W3 sensor type
Select TC-W5 sensor type
Select TC-Lr sensor type
[19] Select OFF function - relay is permanently off
Select POWER function - relay indicates power status OK
Select ERROR function - relay indicates sensor error only
Select WINDOW function - relay is controlled by 2 setpoints
Select SETPOINT function - relay is controlled by 1 setpoint
[20] Select Normally Closed contact
Select Normally Open contact
[21] Set Relay setpoint
[22] Select Action on decreasing signal
Select Action on increasing signal
[23] Set Relay hysteresis
[24] Select No error action - undefined status at error
Select Open relay contact at error
Select Close relay contact at error
Select Hold relay status at error
[25] Set Relay ON delay in seconds
[26] Set Relay OFF delay in seconds
[27] Select Contact is Closed Inside Window
Select Contact is Open Inside Window
[28] Set Relay window setpoint low
[29] Set Relay window setpoint high
[30] Set Relay window hysteresis
[31] Select Internal temperature sensor
Select CJC connector (Accessory)
[34] Select Open relay contact at error
Select Close relay contact at error
[37] Select 0-20 mA outout range
Select 4-20 mA output range
Select 20-0 mA output range
Select 20-4 mA output range
[38] Select No error action - output undefined at error
Select Downscale at error
Select Namur NE43 downscale at error
Select Namur NE43 upscale at error
[39] Select Analogue output response time in seconds.
[41] Set Temperature for analogue output low
[42] Set Temperature for analogue output high
[43] Enter SIL setup
Enter Simulation mode
Enter Rail setup
Perform Process Calibration
Enter Language setup
Enter Password setup
Enter Display setup
Perform Memory operations
[44] Load saved configuration into module
Save configuration in display front
[45] Adjust LCD contrast
[46] Adjust LCD backlight
[47] Write a 5-character channel TAG
[48] Show Analog output value in display
Show TAG on display
Alternate shown information in display

[49] Calibrate Input low to process value?
[50] Calibrate Input high to process value?
[51] Enable input simulation?
[52] Set the input simulation value
[53] Relay simulation - use ⌃ to toggle relay
[54] Enable Password protection?
[55] Set New password
[56] Enable Fastset functionality?
[57] Relay setpoint - press OK to save
[58] Relay setpoint - Read only
[59] Select Language
[60] Use process calibration values?
[61] Set value for low calibration point
[62] Set value for high calibration point
[63] Enable Rail status signal output?
[64] Enable SIL configuration lock?
0...20 mA is not a valid output range for SIL operation
[66] Configuration SIL status (Open / Locked)
[80] Sensor short circuit
[81] Sensor wire breakage
[82] Display underrange
[83] Display overrange
[84] Input underrange
[85] Input overrange
[86] Input error - check input connections and reset power
[87] Output error - check connentions and reset power
[88] Flash memory error - chek configuration
[89] Invalid configuration type or version
[90] Hardware error
[91] CJC sensor error - check device temperature
[92] CJC error - check CJC connector block
[93] No communication

# Graphic depiction of window

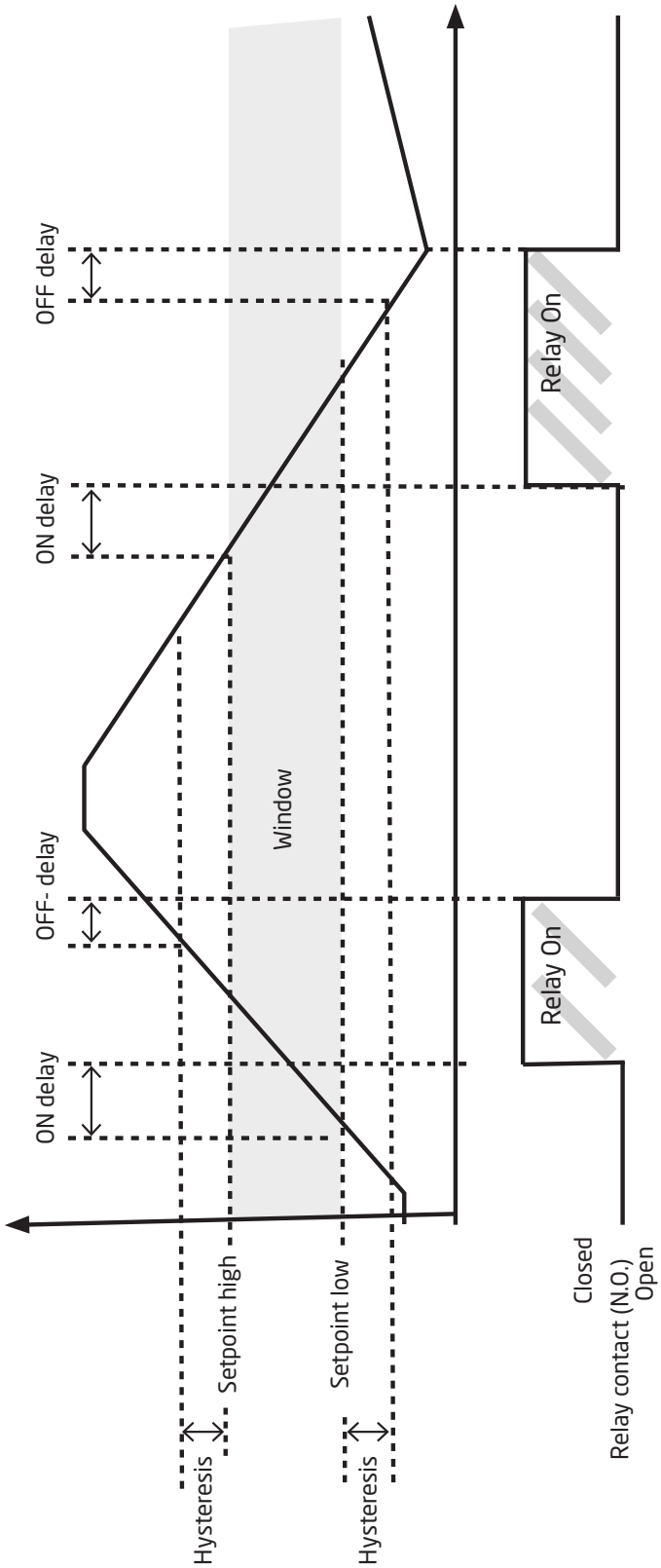

# Graphic depiction of setpoint

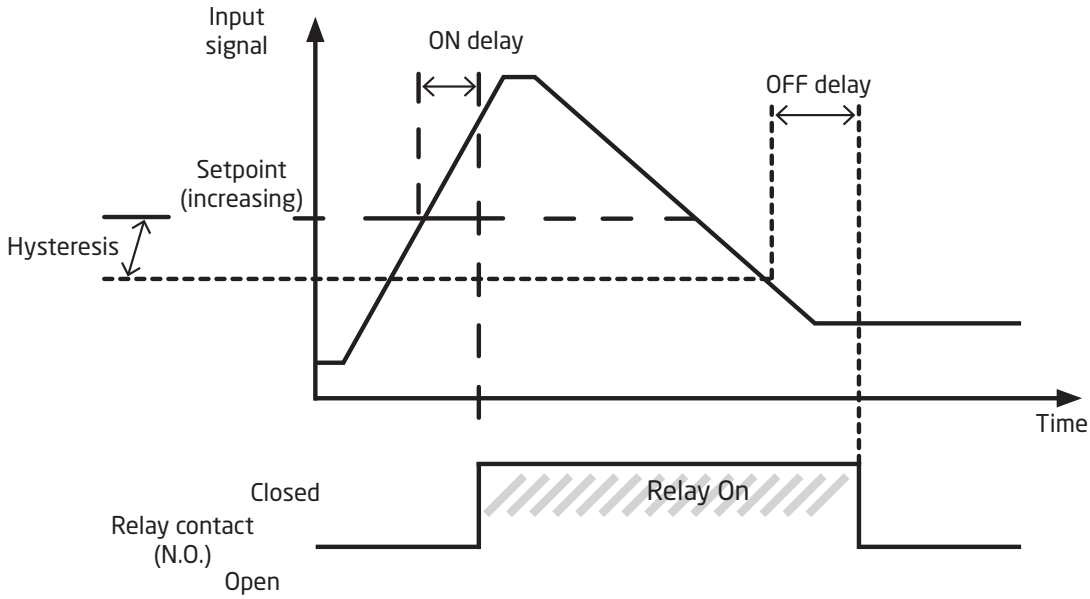

LERBAKKEN 10, 8410 ROENDE DENMARK

# IECEx Installation drawing

For safe installation of 9116 the following must be observed. The module shall only be installed by qualified personnel who are familiar with the national and international laws, directives and standards that apply to this area.
Year of manufacture can be taken from the first two digits in the serial number.

For Installation in Zone 2 the following must be observed.
The 4501 programming module is to be used solely with PR electronics modules. It is important that the module is undamaged and has not been altered or modified in any way. Only 4501 modules free of dust and moisture shall be installed.

| | |
|---|---|
| **IECEx Certificate:** | KEM 10.0022X |
| **Marking 9116Bxx:** | [Ex ia Ga] IIC/IIB/IIA<br>[Ex ia Da] IIIC<br>[Ex ia Ma] I |
| **Marking 9116Bxx, 9116Axx:** | Ex ec nC IIC T4 Gc |
| **Standards** | IEC60079-0:2017, IEC60079-11:2011,<br>IEC60079-15:2017, IEC60079-7:2015+A1:2017 |

**9116Bxx Installation:**

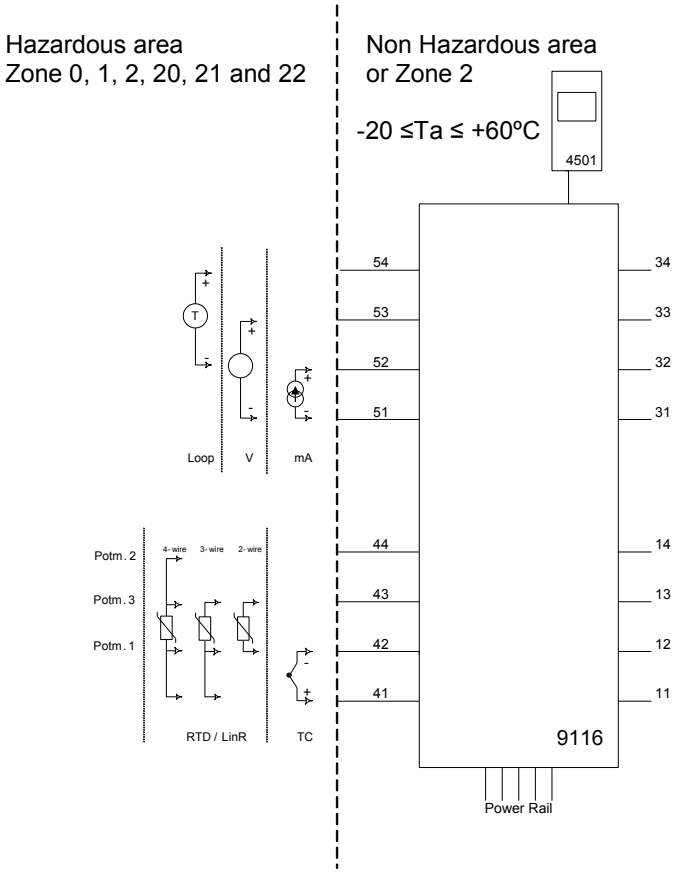


**Supply terminal (31,32)**
Voltage: 19.2 – 31.2 VDC

**Status relay, terminal (33,34)**
**Zone 2 installation:**

| | |
|---|---|
| Voltage max: | 32 VAC/ 32 VDC |
| Power max: | 16 VA / 32 W |
| Current max: | 0.5 A AC / 1 A DC |

**Relay output, terminal (13,14)**
**Zone 2 installation**

| | |
|---|---|
| Voltage max: | 32 V AC / 30 VDC |
| Power max: | 64 VA / 60 W |
| Current max: | 2 A AC / 2 ADC |

**(terminal 11,12,13,14)**
**(terminal 31,32,33,34)**
**(terminal 91,92,93,94,95)**
$U_m$: 253 V max. 400 Hz

LERBAKKEN 10, 8410 ROENDE DENMARK

| Module 9116B1 | |
|---|---|
| Terminal 51-52, 51-53 | |
| Ui | 30 V |
| Ii | 120 mA |
| Pi | 900 mW |
| Ci | 3 nF |
| Li | 1 µH |

| Module 9116B2 | |
|---|---|
| Terminal 51-52, 51-53 | |
| Ui | 30 V |
| Ii | 120 mA |
| Pi | 900 mW |
| Ci | 3 nF |
| Li | 1 µH |

| Module 9116B1 Terminal 51-54, 52-54 | | Group | Co | Lo | Lo/Ro |
|---|---|---|---|---|---|
| Uo | 28 V | IIC | 80 nF | 4 mH | 54 µH/Ω |
| Io | 93 mA | IIB | 640 nF | 16 mH | 218 µH/Ω |
| Po | 650 mW | IIA | 2.1 µF | 32 mH | 436 µH/Ω |

| Module 9116B2 Terminal 51-54, 52-54 | | Group | Co | Lo | Lo/Ro |
|---|---|---|---|---|---|
| Uo | 21.4 V | IIC | 0.16 µF | 4 mH | 54 µH/Ω |
| Io | 93 mA | IIB | 1.13 µF | 16 mH | 218 µH/Ω |
| Po | 650 mW | IIA | 4.15 µF | 32 mH | 436 µH/Ω |

| Module 9116B1 Terminal 51-53 | | Group | Co | Lo | Lo/Ro |
|---|---|---|---|---|---|
| Uo | 28 V | IIC | 80 nF | 1000 mH | 4 mH/Ω |
| Io | 1.1 mA | IIB | 640 nF | 1000 mH | 17 mH/Ω |
| Po | 8 mW | IIA | 2.1 µF | 1000 mH | 35 mH/Ω |

| Module 9116B2 Terminal 51-53 | | Group | Co | Lo | Lo/Ro |
|---|---|---|---|---|---|
| Uo | 21.4 V | IIC | 0.16 µF | 1000 mH | 4 mH/Ω |
| Io | 1.1 mA | IIB | 1.13 µF | 1000 mH | 17 mH/Ω |
| Po | 8 mW | IIA | 4.15 µF | 1000 mH | 35 mH/Ω |

| Module 9116B1 Terminal 51-52 | | Group | Co | Lo | Lo/Ro |
|---|---|---|---|---|---|
| Uo | 8.3 V | IIC | 7 µF | 1000 mH | 100 mH/Ω |
| Io | 0.2 mA | IIB | 73 µF | 1000 mH | 400 mH/Ω |
| Po | 0.4 mW | IIA | 1000 µF | 1000 mH | 800 mH/Ω |
| | | | | | |
| Module 9116B1 Terminal 41,42,43,44 | | Group | Co | Lo | Lo/Ro |
| Uo | 8.3 V | IIC | 7 µF | 207 mH | 1 mH/Ω |
| Io | 13.1 mA | IIB | 73 µF | 828 mH | 5 mH/Ω |
| Po | 27.3 mW | IIA | 1000 µF | 1000 mH | 10 mH/Ω |

| Module 9116B2 Terminal 51-52 | | Group | Co | Lo | Lo/Ro |
|---|---|---|---|---|---|
| Uo | 8.3 V | IIC | 7 µF | 1000 mH | 100 mH/Ω |
| Io | 0.2 mA | IIB | 73 µF | 1000 mH | 400 mH/Ω |
| Po | 0.4 mW | IIA | 1000 µF | 1000 mH | 800 mH/Ω |
| | | | | | |
| Module 9116B2 Terminal 41,42,43,44 | | Group | Co | Lo | Lo/Ro |
| Uo | 8.3 V | IIC | 7 µF | 207 mH | 1 mH/Ω |
| Io | 13.1 mA | IIB | 73 µF | 828 mH | 5 mH/Ω |
| Po | 27.3 mW | IIA | 1000 µF | 1000 mH | 10 mH/Ω |

**Installation notes:**

For group I (mines), the parameters for group IIA apply.

Install in pollution degree 2, overvoltage category II as defined in IEC60664-1

Do not separate connectors when energized and an explosive gas mixture is present.

Do not mount or remove modules from the Power Rail when an explosive gas mixture is present.

Disconnect power before servicing.

The wiring of unused terminals is not allowed.

In type of protection [Ex ia Da] the parameters for intrinsic safety for gas group IIB are applicable.

For installation in Zone 2, the module shall be installed in an enclosure in type of protection Ex n or Ex e, providing a degree of protection of at least IP54. Cable entry devices and blanking elements shall fulfill the same requirements.

For installation on Power Rail in Zone 2, only Power Rail type 9400 supplied by Power Control Unit type 9410 (Type Examination Certificate KEMA 07ATEX0152 X) is allowed.

Max. screw terminal torque 0.5 Nm.
Stranded wire should be installed with an insulation stripping length of 5 mm or via a suitable insulated terminal such as a bootlace ferrule.

LERBAKKEN 10, 8410 ROENDE DENMARK

**9116Bxx Installation:**

Hazardous area
Zone 0,1,2, 20, 21, 22

Non Hazardous area
or Zone 2

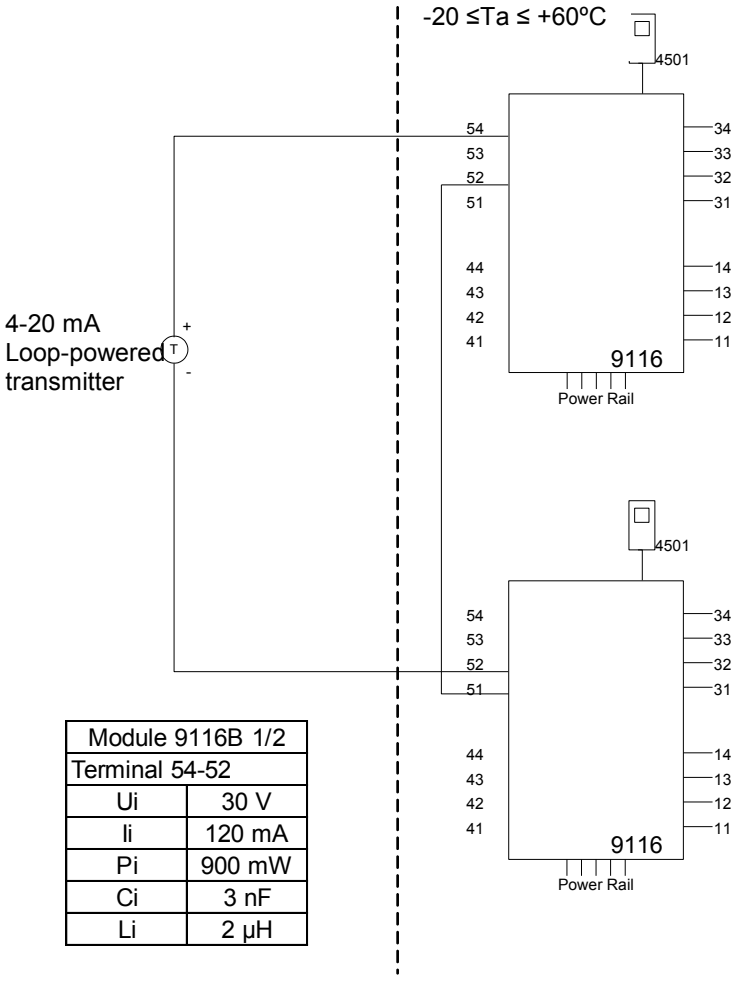


| Module 9116B 1/2 | |
|---|---|
| Terminal 54-52 | |
| Ui | 30 V |
| Ii | 120 mA |
| Pi | 900 mW |
| Ci | 3 nF |
| Li | 2 µH |

**Supply terminal (31,32)**
Voltage: 19.2 – 31.2 VDC

**Status relay, terminal (33,34)**

**Zone 2 installation:**
Voltage max: 32 VAC/ 32 VDC
Power max: 16 VA / 32 W
Current max: 0.5 A AC / 1 A DC

**Relay output, terminal (13,14)**

**Zone 2 installation**
Voltage max: 32 V AC / 30 VDC
Power max: 64 VA / 60 W
Current max: 2 A AC / 2 ADC

**(terminal 11,12,13,14)**
**(terminal 31,32,33,34)**
**(terminal 91,92,93,94,95)**
$U_m$: 253 V max. 400 Hz

| Module 9116B1 Term. 54-52; 51-52 | | Group | Co | Lo | Lo/Ro |
|---|---|---|---|---|---|
| Uo | 28 V | IIC | 80 nF | 4 mH | 54 µH/Ω |
| Io | 93 mA | IIB | 640 nF | 16 mH | 218 µH/Ω |
| Po | 650 mW | IIA | 2.1 µF | 32 mH | 436 µH/Ω |

| Module 9116B2 Term. 54-52; 51-52 | | Group | Co | Lo | Lo/Ro |
|---|---|---|---|---|---|
| Uo | 21.4 V | IIC | 0.16 µF | 4 mH | 54 µH/Ω |
| Io | 93 mA | IIB | 1.13 µF | 16 mH | 218 µH/Ω |
| Po | 650 mW | IIA | 4.15 µF | 32 mH | 436 µH/Ω |

LERBAKKEN 10, 8410 ROENDE DENMARK

**9116Bxx Installation:**

Hazardous area
Zone 0, 1, 2, 20, 21, 22

Non Hazardous area
or Zone 2

-20 ≤Ta ≤ +60ºC

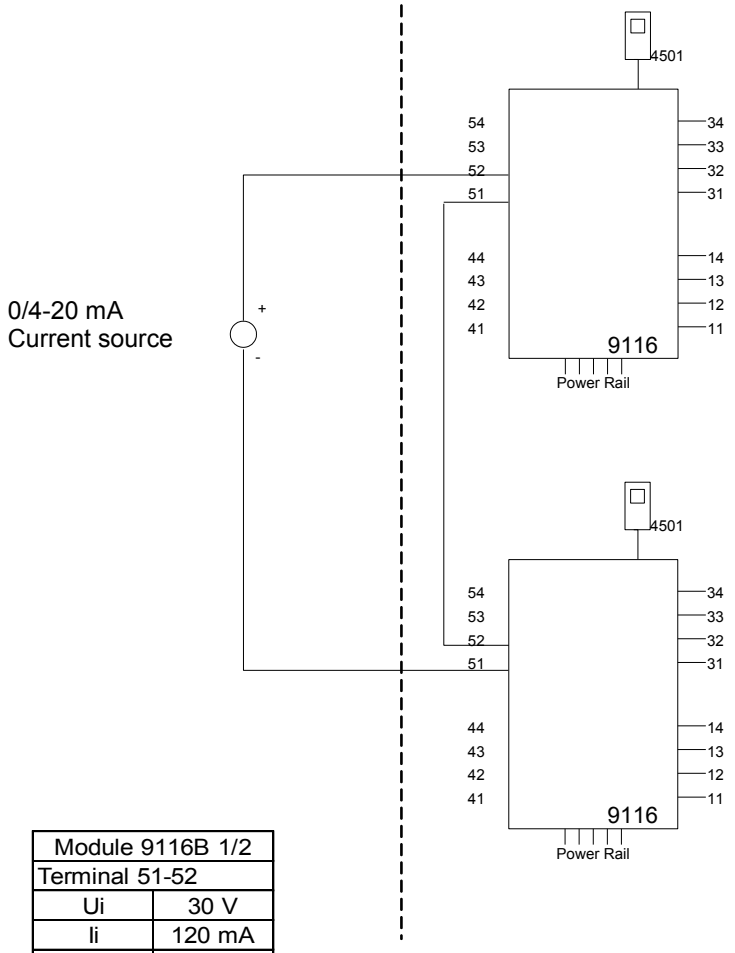


**Supply terminal (31,32)**
Voltage: 19.2 – 31.2 VDC

**Status relay, terminal (33,34)**

**Zone 2 installation:**
Voltage max: 32 VAC/ 32 VDC
Power max: 16 VA / 32 W
Current max: 0.5 A AC / 1 A DC

**Relay output, terminal (13,14)**

**Zone 2 installation**
Voltage max: 32 V AC / 30 VDC
Power max: 64 VA / 60 W
Current max: 2 A AC / 2 ADC

**(terminal 11,12,13,14)**
**(terminal 31,32,33,34)**
**(terminal 91,92,93,94,95)**
$U_m$: 253 V max. 400 Hz

| Module 9116B 1/2 | |
|---|---|
| Terminal 51-52 | |
| Ui | 30 V |
| Ii | 120 mA |
| Pi | 900 mW |
| Ci | 3 nF |
| Li | 2 µH |

| Module 9116B 1/2 Term. 52-51, 51-52 | | Group | Co | Lo | Lo/Ro |
|---|---|---|---|---|---|
| Uo | 16.6 V | IIC | 0.4 µF | 100 mH | 25mH/Ω |
| Io | 0.2 mA | IIB | 2.3 µF | 100 mH | 100mH/Ω |
| Po | 0.8 mW | IIA | 9.5 µF | 100 mH | 200mH/Ω |

LERBAKKEN 10, 8410 ROENDE DENMARK

**9116Axx Installation:**

Non Hazardous area or Zone 2

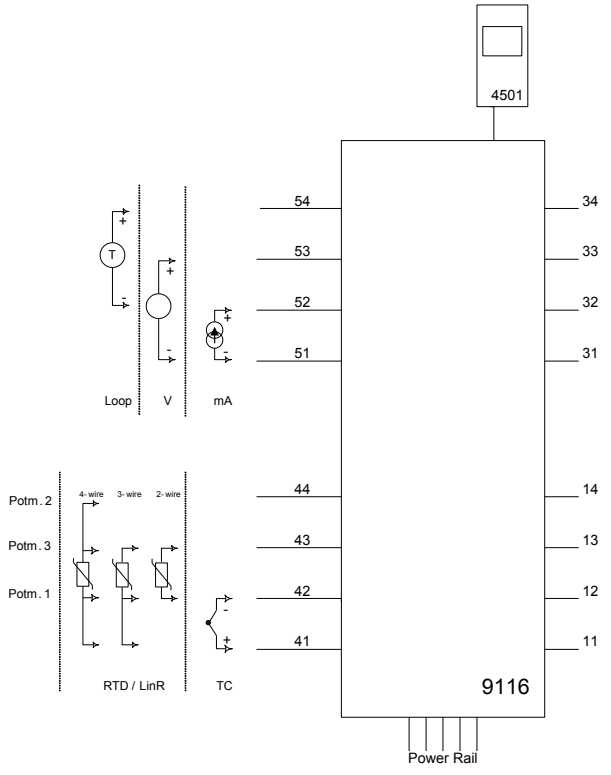


**Supply terminal (31,32)**
Voltage: 19.2 – 31.2 VDC

**Status relay, terminal (33,34)**
**Zone 2 installation:**
Voltage max: 32 VAC/ 32 VDC
Power max: 16 VA / 32 W
Current max: 0.5 A AC / 1 A DC

**Relay output, terminal (13,14)**
**Zone 2 installation**
Voltage max: 32 V AC / 30 VDC
Power max: 64 VA / 60 W
Current max: 2 A AC / 2 ADC

For installation in Zone 2, the module shall be installed in an enclosure in type of protection Ex n or Ex e, providing a degree of protection of at least IP54. Cable entry devices and blanking elements shall fulfill the same requirements.

For installation on Power Rail in Zone 2, only Power Rail type 9400 supplied by Power Control Unit type 9410 (Type Examination Certificate IECEx KEM 08.0025X) is allowed.

The 4501 programming module is to be used solely with PR electronics' modules. It is important that the module is undamaged and has not been altered or modified in any way.
Only 4501 modules free of dust and moisture shall be installed.

LERBAKKEN 10, 8410 RØNDE DENMARK

# ATEX / UKEX Installation drawing

For safe installation of 9116 the following must be observed. The module shall only be installed by qualified personnel who are familiar with the national and international laws, directives and standards that apply to this area.
Year of manufacture can be taken from the first two digits in the serial number.

For installation in Zone 2 the following must be observed.
The 4501 programming module is to be used solely with PR electronics' modules. It is important that the module is undamaged and has not been altered or modified in any way.
Only 4501 modules free of dust and moisture shall be installed.

| | |
|---|---|
| **ATEX Certificate:** | KEMA 10 ATEX 0053 X |
| **UKEX Certificate 9116Bxx:** | DEKRA 23UKEX0104 X |
| **UKEX Certificate 9116Axx, 9116Bxx:** | DEKRA 21UKEX0177 X |
| **Marking 9116Bxx:** | II (1) G [Ex ia Ga] IIC/IIB/IIA<br>II (1) D [Ex ia Da] IIIC<br>I (M1) [Ex ia Ma] I |
| **Marking 9116Bxx, 9116Axx** | II 3G Ex ec nC IIC T4 Gc |
| **Standards** | EN 60079-0:2018, EN 60079-11:2012,<br>EN 60079-15:2019, EN60079-7:2015+A1:2018 |

**Specific Conditions of Use**
For group I (mines), the parameters for group IIA apply.

Install in pollution degree 2, overvoltage category II as defined in EN60664-1

Do not separate connectors when energized and an explosive gas mixture is present.
Do not mount or remove modules from the Power Rail when an explosive gas mixture is present.
Disconnect power before servicing.
The wiring of unused terminals is not allowed.

In type of protection [Ex ia Da] the parameters for intrinsic safety for gas group IIB are applicable.

For installation in Zone 2, the module shall be installed in an enclosure in type of protection Ex e, providing a degree of protection of at least IP54. Cable entry devices and blanking elements shall fulfill the same requirements.

For installation on Power Rail in Zone 2, only Power Rail type 9400 supplied by Power Control Unit type 9410 (Type Examination Certificate KEMA 07ATEX0152 X, DEKRA 21UKEX0169 X) is allowed.

Max. screw terminal torque 0.5 Nm.

Stranded wire should be installed with an insulation stripping length of 5 mm or via a suitable insulated terminal such as a bootlace ferrule.

LERBAKKEN 10, 8410 RØNDE DENMARK

**9116Bxx Installation:**

Hazardous area
Zone 0,1,2, 20, 21, 22

Non Hazardous area
or Zone 2

-20 ≤Ta ≤ +60ºC

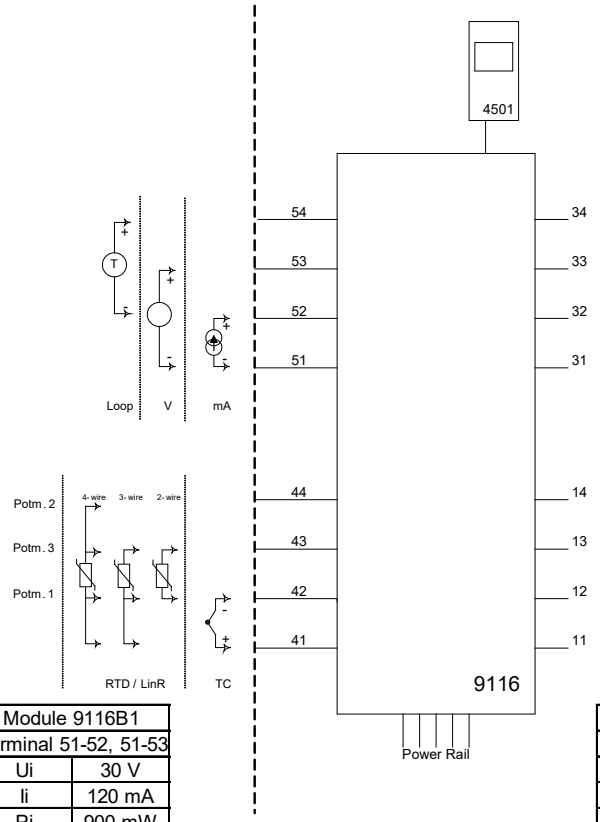


**Supply terminal (31,32)**
Voltage: 19.2 – 31.2 VDC

**Status relay, terminal (33,34)**

**Zone 2 installation:**
Voltage max: 32 VAC/ 32 VDC
Power max: 16 VA / 32 W
Current max: 0.5 A AC / 1 A DC

**Relay output, terminal (13,14)**

**Zone 2 installation**
Voltage max: 32 V AC / 30 VDC
Power max: 64 VA / 60 W
Current max: 2 A AC / 2 ADC

**(terminal 11,12,13,14)**
**(terminal 31,32,33,34)**
**(terminal 91,92,93,94,95)**
$U_m$: 253 V max. 400 Hz

| Module 9116B1 | |
|---|---|
| Terminal 51-52, 51-53 | |
| Ui | 30 V |
| Ii | 120 mA |
| Pi | 900 mW |
| Ci | 3 nF |
| Li | 1 µH |

| Module 9116B2 | |
|---|---|
| Terminal 51-52, 51-53 | |
| Ui | 30 V |
| Ii | 120 mA |
| Pi | 900 mW |
| Ci | 3 nF |
| Li | 1 µH |

| Module 9116B1 Terminal 51-54, 52-54 | | Group | Co | Lo | Lo/Ro |
|---|---|---|---|---|---|
| Uo | 28 V | IIC | 80 nF | 4 mH | 54 µH/Ω |
| Io | 93 mA | IIB | 640 nF | 16 mH | 218 µH/Ω |
| Po | 650 mW | IIA | 2.1 µF | 32 mH | 436 µH/Ω |

| Module 9116B2 Terminal 51-54, 52-54 | | Group | Co | Lo | Lo/Ro |
|---|---|---|---|---|---|
| Uo | 21.4 V | IIC | 0.16 µF | 4 mH | 54 µH/Ω |
| Io | 93 mA | IIB | 1.13 µF | 16 mH | 218 µH/Ω |
| Po | 650 mW | IIA | 4.15 µF | 32 mH | 436 µH/Ω |

| Module 9116B1 Terminal 51-53 | | Group | Co | Lo | Lo/Ro |
|---|---|---|---|---|---|
| Uo | 28 V | IIC | 80 nF | 1000 mH | 4 mH/Ω |
| Io | 1.1 mA | IIB | 640 nF | 1000 mH | 17 mH/Ω |
| Po | 8 mW | IIA | 2.1 µF | 1000 mH | 35 mH/Ω |

| Module 9116B2 Terminal 51-53 | | Group | Co | Lo | Lo/Ro |
|---|---|---|---|---|---|
| Uo | 21.4 V | IIC | 0.16 µF | 1000 mH | 4 mH/Ω |
| Io | 1.1 mA | IIB | 1.13 µF | 1000 mH | 17 mH/Ω |
| Po | 8 mW | IIA | 4.15 µF | 1000 mH | 35 mH/Ω |

| Module 9116B1 Terminal 51-52 | | Group | Co | Lo | Lo/Ro |
|---|---|---|---|---|---|
| Uo | 8.3 V | IIC | 7 µF | 1000 mH | 100 mH/Ω |
| Io | 0.2 mA | IIB | 73 µF | 1000 mH | 400 mH/Ω |
| Po | 0.4 mW | IIA | 1000 µF | 1000 mH | 800 mH/Ω |
| | | | | | |
| Module 9116B1 Terminal 41,42,43,44 | | Group | Co | Lo | Lo/Ro |
| Uo | 8.3 V | IIC | 7 µF | 207 mH | 1 mH/Ω |
| Io | 13.1 mA | IIB | 73 µF | 828 mH | 5 mH/Ω |
| Po | 27.3 mW | IIA | 1000 µF | 1000 mH | 10 mH/Ω |

| Module 9116B2 Terminal 51-52 | | Group | Co | Lo | Lo/Ro |
|---|---|---|---|---|---|
| Uo | 8.3 V | IIC | 7 µF | 1000 mH | 100 mH/Ω |
| Io | 0.2 mA | IIB | 73 µF | 1000 mH | 400 mH/Ω |
| Po | 0.4 mW | IIA | 1000 µF | 1000 mH | 800 mH/Ω |
| | | | | | |
| Module 9116B2 Terminal 41,42,43,44 | | Group | Co | Lo | Lo/Ro |
| Uo | 8.3 V | IIC | 7 µF | 207 mH | 1 mH/Ω |
| Io | 13.1 mA | IIB | 73 µF | 828 mH | 5 mH/Ω |
| Po | 27.3 mW | IIA | 1000 µF | 1000 mH | 10 mH/Ω |

LERBAKKEN 10, 8410 RØNDE DENMARK

**9116Bxx Installation:**

Hazardous area
Zone 0,1,2, 20, 21, 22

Non Hazardous area
or Zone 2

-20 ºC ≤Ta ≤ +60ºC

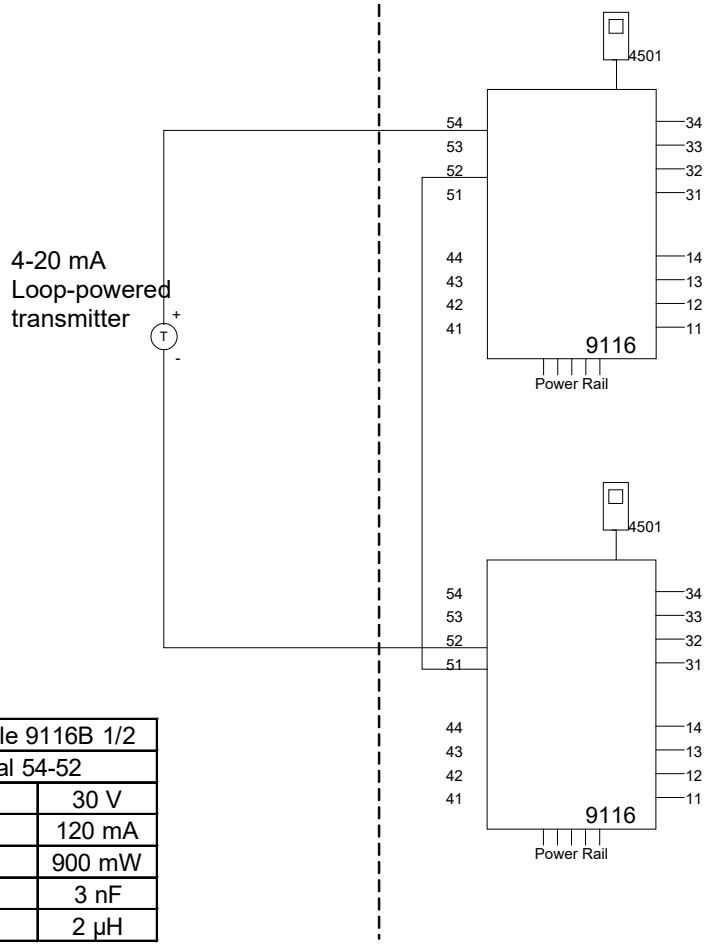


**Supply terminal (31,32)**
Voltage: 19.2 – 31.2 VDC

**Status relay, terminal (33,34)**
**Zone 2 installation:**
Voltage max: 32 VAC/ 32 VDC
Power max: 16 VA / 32 W
Current max: 0.5 A AC / 1 A DC

**Relay output, terminal (13,14)**
**Zone 2 installation**
Voltage max: 32 V AC / 30 VDC
Power max: 64 VA / 60 W
Current max: 2 A AC / 2 ADC

**(terminal 11,12,13,14)**
**(terminal 31,32,33,34)**
**(terminal 91,92,93,94,95)**
$U_m$: 253 V max. 400 Hz

| Module 9116B 1/2 | |
|---|---|
| Terminal 54-52 | |
| Ui | 30 V |
| Ii | 120 mA |
| Pi | 900 mW |
| Ci | 3 nF |
| Li | 2 µH |

| Module 9116B1 Term. 54-52; 51-52 | | Group | Co | Lo | Lo/Ro |
|---|---|---|---|---|---|
| Uo | 28 V | IIC | 80 nF | 4 mH | 54 µH/Ω |
| Io | 93 mA | IIB | 640 nF | 16 mH | 218 µH/Ω |
| Po | 650 mW | IIA | 2.1 µF | 32 mH | 436 µH/Ω |

| Module 9116B2 Term. 54-52; 51-52 | | Group | Co | Lo | Lo/Ro |
|---|---|---|---|---|---|
| Uo | 21.4 V | IIC | 0.16 µF | 4 mH | 54 µH/Ω |
| Io | 93 mA | IIB | 1.13 µF | 16 mH | 218 µH/Ω |
| Po | 650 mW | IIA | 4.15 µF | 32 mH | 436 µH/Ω |

LERBAKKEN 10, 8410 RØNDE DENMARK

**9116Bxx Installation:**

Hazardous area
Zone 0,1,2, 20, 21, 22

Non Hazardous area
or Zone 2

-20 ºC ≤Ta ≤ +60ºC

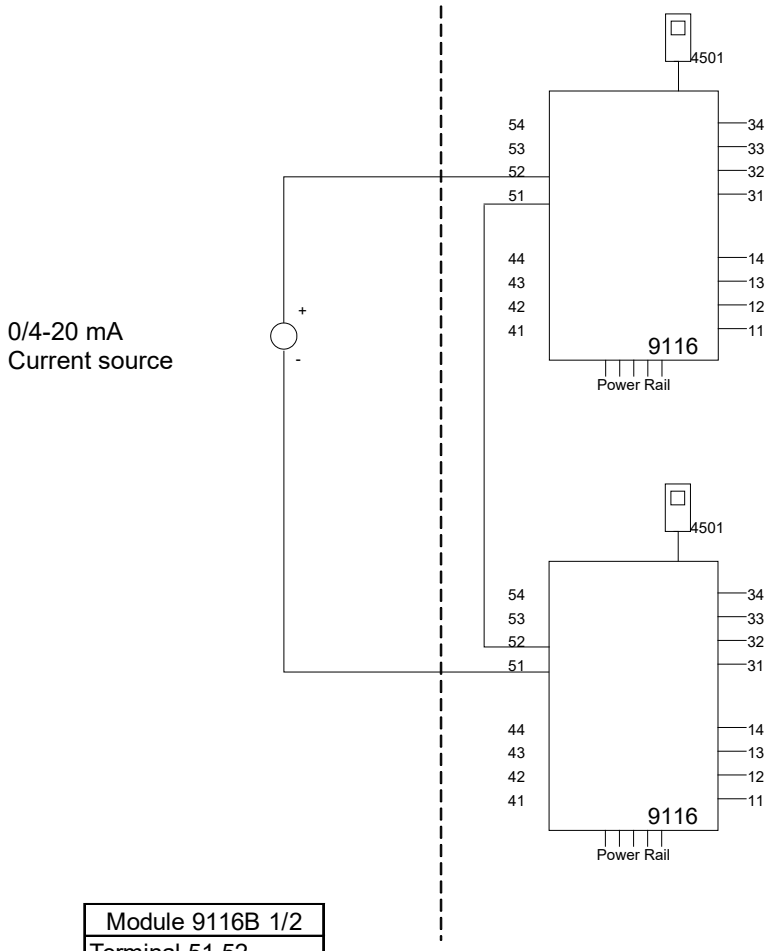


**Supply terminal (31,32)**
Voltage: 19.2 – 31.2 VDC

**Status relay, terminal (33,34)**
**Zone 2 installation:**
Voltage max: 32 VAC/ 32 VDC
Power max: 16 VA / 32 W
Current max: 0.5 A AC / 1 A DC

**Relay output, terminal (13,14)**
**Zone 2 installation**
Voltage max: 32 V AC / 30 VDC
Power max: 64 VA / 60 W
Current max: 2 A AC / 2 ADC

**(terminal 11,12,13,14)**
**(terminal 31,32,33,34)**
**(terminal 91,92,93,94,95)**
$U_m$: 253 V max. 400 Hz

| Module 9116B 1/2 | |
|---|---|
| Terminal 51-52 | |
| Ui | 30 V |
| Ii | 120 mA |
| Pi | 900 mW |
| Ci | 3 nF |
| Li | 2 µH |

| Module 9116B 1/2 Term. 52-51, 51-52 | | Group | Co | Lo | Lo/Ro |
|---|---|---|---|---|---|
| Uo | 16.6 V | IIC | 0.4 µF | 100 mH | 25mH/Ω |
| Io | 0.2 mA | IIB | 2.3 µF | 100 mH | 100mH/Ω |
| Po | 0.8 mW | IIA | 9.5 µF | 100 mH | 200mH/Ω |

LERBAKKEN 10, 8410 RØNDE DENMARK

**9116Axx Installation:**

Non Hazardous area or Zone 2

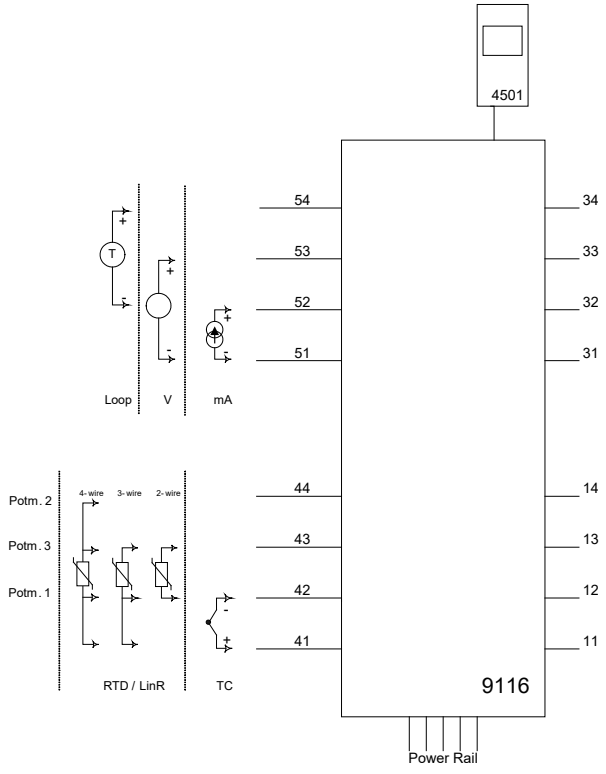


**Supply terminal (31,32)**
Voltage: 19.2 – 31.2 VDC

**Status relay, terminal (33,34)**
**Zone 2 installation:**
Voltage max: 32 VAC/ 32 VDC
Power max: 16 VA / 32 W
Current max: 0.5 A AC / 1 A DC

**Relay output, terminal (13,14)**
**Zone 2 installation**
Voltage max: 32 V AC / 30 VDC
Power max: 64 VA / 60 W
Current max: 2 A AC / 2 ADC

For installation in Zone 2, the module shall be installed in an enclosure in type of protection Ex e, providing a degree of protection of at least IP54. Cable entry devices and blanking elements shall fulfill the same requirements.

For installation on Power Rail in Zone 2, only Power Rail type 9400 supplied by Power Control Unit type 9410 (Type Examination Certificate KEMA 07ATEX0152 X, DEKRA 21UKEX0169 X) is allowed.

The 4501 programming module is to be used solely with PR electronics' modules. It is important that the module is undamaged and has not been altered or modified in any way.
Only 4501 modules free of dust and moisture shall be installed.

Max. screw terminal torque 0.5 Nm.
Stranded wire should be installed with an insulation stripping length of 5 mm or via a suitable insulated terminal such as a bootlace ferrule.

LERBAKKEN 10, 8410 ROENDE DENMARK

# FM Installation drawing

**9116**
For safe installation of 9116B the following must be observed. The module shall only be installed by qualified personnel who are familiar with the national and international laws, directives and standards that apply to this area.
Year of manufacture can be taken from the first two digits in the serial number.

4501
For Installation in Zone 2 / Division 2 the following must be observed.
The 4501 programming module is to be used solely with PR electronics modules. It is important that the module is undamaged and has not been altered or modified in any way. Only 4501 modules free of dust and moisture shall be installed.

**Hazardous Classified Location**
Class I/II/III, Division 1, Group A,B,C,D,E,F,G
or Class I, Zone 0/1 Group IIC, [AEx ia] IIC
or Group IIC, [Ex ia Ga] IIC Gc

**Unclassified Location or**
**Hazardous Classified Location**
Class I, Division 2, Group A,B,C,D T4
or Class I Zone 2 Group IIC T4 Gc

Simple Apparatus or
Intrinsic safe apparatus
with entity parameters:

Vmax (Ui) ≥ Vt (Uo)
Imax (Ii) ≥ It (Io)
Pi ≥ Pt (Po)
Ca ≥ Ccable + Ci
La ≥ Lcable + Li

-20 ≤Ta ≤ +60ºC

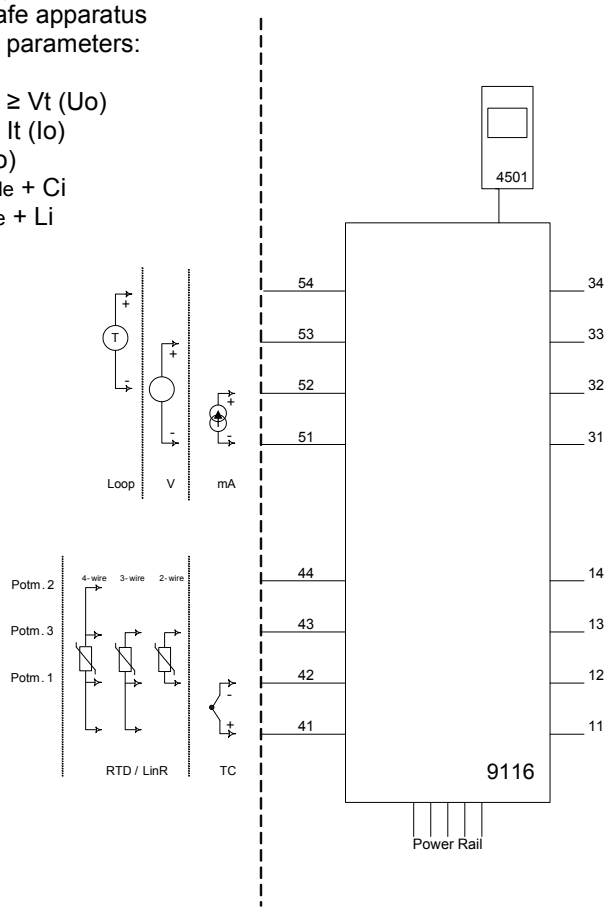


**Status relay, terminal (33,34)**

**Non hazardous area installation**
Voltage max: 125 VAC / 110 VDC
Power max: 62.5 VA / 32 W
Current max: 0.5 A AC / 0.3 ADC

**Zone 2 installation:**
Voltage max: 32 VAC/ 32 VDC
Power max: 16 VA / 32 W
Current max: 0.5 A AC / 1 A DC

**Relay output, terminal (13,14)**

**Non hazardous area installation**
Voltage max: 250 VAC / 30 VDC
Power max: 500 VA / 60 W
Current max: 2 A AC / 2 ADC

**Zone 2 installation**
Voltage max: 32 V AC / 30 VDC
Power max: 64 VA / 60 W
Current max: 2 A AC / 2 ADC

**(terminal 11,12,13,14)**
**(terminal 31,32,33,34)**
**(terminal 91,92,93,94,95)**
$U_m$: 253 V max. 400 Hz

LERBAKKEN 10, 8410 ROENDE DENMARK

| Module 9116B1 | |
|---|---|
| Terminal 51-52, 51-53 | |
| Ui, Vmax | 30 V |
| Ii, Imax | 120 mA |
| Pi | 900 mW |
| Ci | 3 nF |
| Li | 1 µH |

| Module 9116B2 | |
|---|---|
| Terminal 51-52, 51-53 | |
| Ui, Vmax | 30 V |
| Ii, Imax | 120 mA |
| Pi | 900 mW |
| Ci | 3 nF |
| Li | 1 µH |

| Module 9116B1 Terminal 51-54, 52-54 | | Group | Co | Lo | Lo/Ro |
|---|---|---|---|---|---|
| Uo, Voc | 28 V | IIC or A,B | 80 nF | 4 mH | 54 µH/Ω |
| Io, Isc | 93 mA | IIB or C,E,F | 640 nF | 16 mH | 218 µH/Ω |
| Po | 650 mW | IIA or D,G | 2.1 µF | 32 mH | 436 µH/Ω |

| Module 9116B2 Terminal 51-54, 52-54 | | Group | Co | Lo | Lo/Ro |
|---|---|---|---|---|---|
| Uo, Voc | 21.4 V | IIC or A,B | 0.16 µF | 4 mH | 54 µH/Ω |
| Io, Isc | 93 mA | IIB or C,E,F | 1.13 µF | 16 mH | 218 µH/Ω |
| Po | 650 mW | IIA or D,G | 4.15 µF | 32 mH | 436 µH/Ω |

| Module 9116B1 Terminal 51-53 | | Group | Co | Lo | Lo/Ro |
|---|---|---|---|---|---|
| Uo, Voc | 28 V | IIC or A,B | 80 nF | 1000 mH | 4 mH/Ω |
| Io, Isc | 1.1 mA | IIB or C,E,F | 640 nF | 1000 mH | 17 mH/Ω |
| Po | 8 mW | IIA or D,G | 2.1 µF | 1000 mH | 35 mH/Ω |

| Module 9116B2 Terminal 51-53 | | Group | Co | Lo | Lo/Ro |
|---|---|---|---|---|---|
| Uo, Voc | 21.4 V | IIC or A,B | 0.16 µF | 1000 mH | 4 mH/Ω |
| Io, Isc | 1.1 mA | IIB or C,E,F | 1.13 µF | 1000 mH | 17 mH/Ω |
| Po | 8 mW | IIA or D,G | 4.15 µF | 1000 mH | 35 mH/Ω |

| Module 9116B1 Terminal 51-52 | | Group | Co | Lo | Lo/Ro |
|---|---|---|---|---|---|
| Uo, Voc | 8.3 V | IIC or A,B | 7 µF | 1000 mH | 100 mH/Ω |
| Io, Isc | 0.2 mA | IIB or C,E,F | 73 µF | 1000 mH | 400 mH/Ω |
| Po | 0.4 mW | IIA or D,G | 1000 µF | 1000 mH | 800 mH/Ω |
| | | | | | |
| Module 9116B1 Terminal 41,42,43,44 | | Group | Co | Lo | Lo/Ro |
| Uo, Voc | 8.3 V | IIC or A,B | 7 µF | 207 mH | 1 mH/Ω |
| Io, Isc | 13.1 mA | IIB or C,E,F | 73 µF | 828 mH | 5 mH/Ω |
| Po | 27.3 mW | IIA or D,G | 1000 µF | 1000 mH | 10 mH/Ω |

| Module 9116B2 Terminal 51-52 | | Group | Co | Lo | Lo/Ro |
|---|---|---|---|---|---|
| Uo, Voc | 8.3 V | IIC or A,B | 7 µF | 1000 mH | 100 mH/Ω |
| Io, Isc | 0.2 mA | IIB or C,E,F | 73 µF | 1000 mH | 400 mH/Ω |
| Po | 0.4 mW | IIA or D,G | 1000 µF | 1000 mH | 800 mH/Ω |
| | | | | | |
| Module 9116B2 Terminal 41,42,43,44 | | Group | Co | Lo | Lo/Ro |
| Uo, Voc | 8.3 V | IIC or A,B | 7 µF | 207 mH | 1 mH/Ω |
| Io, Isc | 13.1 mA | IIB or C,E,F | 73 µF | 828 mH | 5 mH/Ω |
| Po | 27.3 mW | IIA or D,G | 1000 µF | 1000 mH | 10 mH/Ω |

**Installation notes:**
In Class I, Division 2 installations, the subject equipment shall be mounted within a too-secured enclosure which is capable of accepting one or more of the Class I, Division 2 wiring methods specified in the the National Electrical Code (ANSI/NFPA 70) or Canadian Electrical Code (C22.1).
In Zone 2 installations, the subject equipment shall be mounted within a tool secured enclosure which is capable of accepting one or more of the Zone 2 wiring methods specified in the National Electrical Code (ANSI/NFPA 70) or the Canadian Electrical Code (C22.1). Where installed in outdoor or potentially wet locations, the enclosure shall, at a minimum, meet the requirements of IP54.
In Zone 2 installations, the installer shall ensure protection of supply terminals against transient voltages exceeding 140% of the rated supply voltage.
Install in environments rated Pollution Degree 2 or better; overvoltage category I or II.
The module must be supplied from a Power Supply having double or reinforced insulation.
The use of stranded wires is not permitted for mains wiring except when wires are fitted with cable ends.
For installation on the 9400 Power Rail the power must be supplied from Power Control Module Unit 9410.
The module is galvanic isolated and does not require grounding.
Use 60 / 75 ºC Copper Conductors with wire Size AWG: (26-14).
**Warning**: Substitution of components may impair intrinsic safety.
**Warning**: To prevent ignition of the explosive atmospheres, disconnect power before servicing and do not separate connectors when energized and an explosive gas mixture is present.
**Warning**: Do not mount or remove modules from the Power Rail when an explosive gas mixture is present.

LERBAKKEN 10, 8410 ROENDE DENMARK

**Hazardous Classified Location**
Class I/II/III, Division 1, Group A,B,C,D,E,F,G
or Class I, Zone 0/1 Group IIC, [AEx ia] IIC
or Group IIC, [Ex ia Ga] IIC Gc

**Unclassified Location or**
**Hazardous Classified Location**
Class I, Division 2, Group A,B,C,D T4
or Class I Zone 2 Group IIC T4 Gc

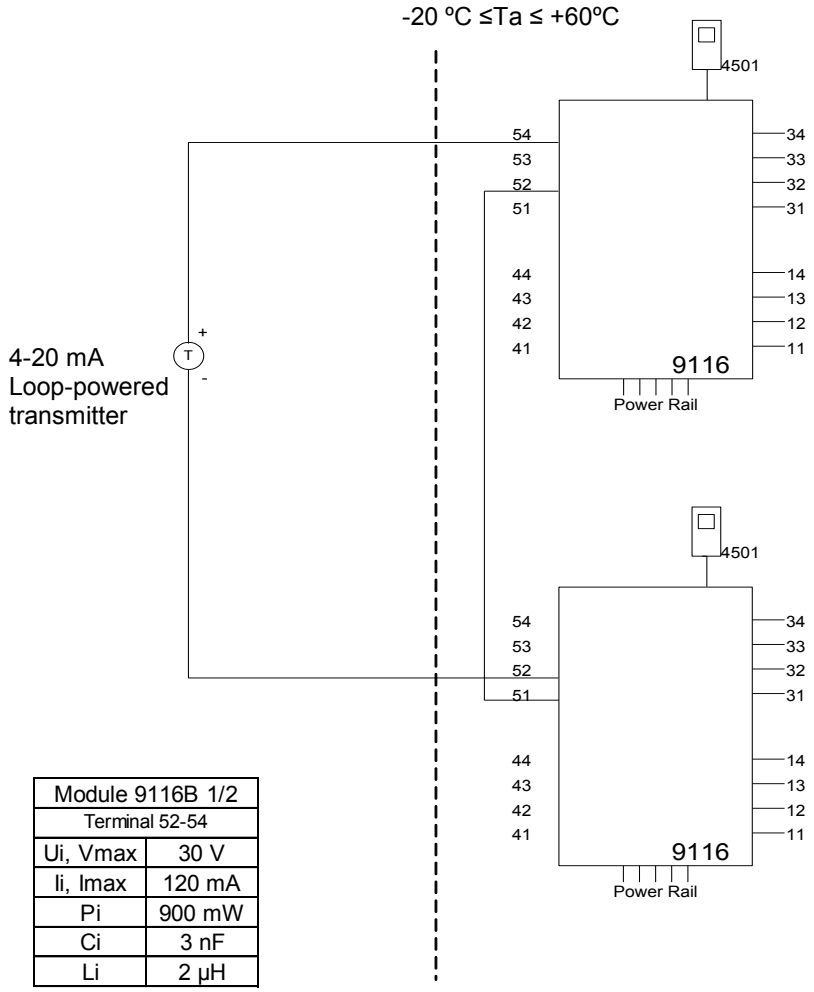


**Status relay, terminal (33,34)**

**Non hazardous area installation**
Voltage max: 125 VAC / 110 VDC
Power max: 62.5 VA / 32 W
Current max: 0.5 A AC / 0.3 ADC

**Zone 2 installation:**
Voltage max: 32 VAC/ 32 VDC
Power max: 16 VA / 32 W
Current max: 0.5 A AC / 1 A DC

**Relay output, terminal (13,14)**

**Non hazardous area installation**
Voltage max: 250 VAC / 30 VDC
Power max: 500 VA / 60 W
Current max: 2 A AC / 2 ADC

**Zone 2 installation**
Voltage max: 32 VAC / 30 VDC
Power max: 64 VA / 60 W
Current max: 2 A AC / 2 ADC

| Module 9116B 1/2 | |
|---|---|
| Terminal 52-54 | |
| Ui, Vmax | 30 V |
| Ii, Imax | 120 mA |
| Pi | 900 mW |
| Ci | 3 nF |
| Li | 2 µH |

| Module 9116B1 Terminals 52-54 | | Group | Co | Lo | Lo/Ro |
|---|---|---|---|---|---|
| Uo, Voc | 28 V | IIC or A,B | 80 nF | 4 mH | 54 µH/Ω |
| Io, Isc | 93 mA | IIB or C,E,F | 640 nF | 16 mH | 218 µH/Ω |
| Po | 650 mW | IIA or D,G | 2.1 µF | 32 mH | 436 µH/Ω |

| Module 9116B2 Terminal 52-54 | | Group | Co | Lo | Lo/Ro |
|---|---|---|---|---|---|
| Uo, Voc | 21.4 V | IIC or A,B | 0.16 µF | 4 mH | 54 µH/Ω |
| Io, Isc | 93 mA | IIB or C,E,F | 1.13 µF | 16 mH | 218 µH/Ω |
| Po | 650 mW | IIA or D,G | 4.15 µF | 32 mH | 436 µH/Ω |

**(terminal 11,12,13,14)**
**(terminal 31,32,33,34)**
**(terminal 91,92,93,94,95)**
$U_m$: 253 V max. 400 Hz

LERBAKKEN 10, 8410 ROENDE DENMARK

**Hazardous Classified Location**
Class I/II/III, Division 1, Group A,B,C,D,E,F,G
or Class I, Zone 0/1 Group IIC, [AEx ia] IIC
or Group IIC, [Ex ia Ga] IIC Gc

**Unclassified Location or**
**Hazardous Classified Location**
Class I, Division 2, Group A,B,C,D T4
or Class I Zone 2 Group IIC T4 Gc

-20 ºC ≤Ta ≤ +60ºC

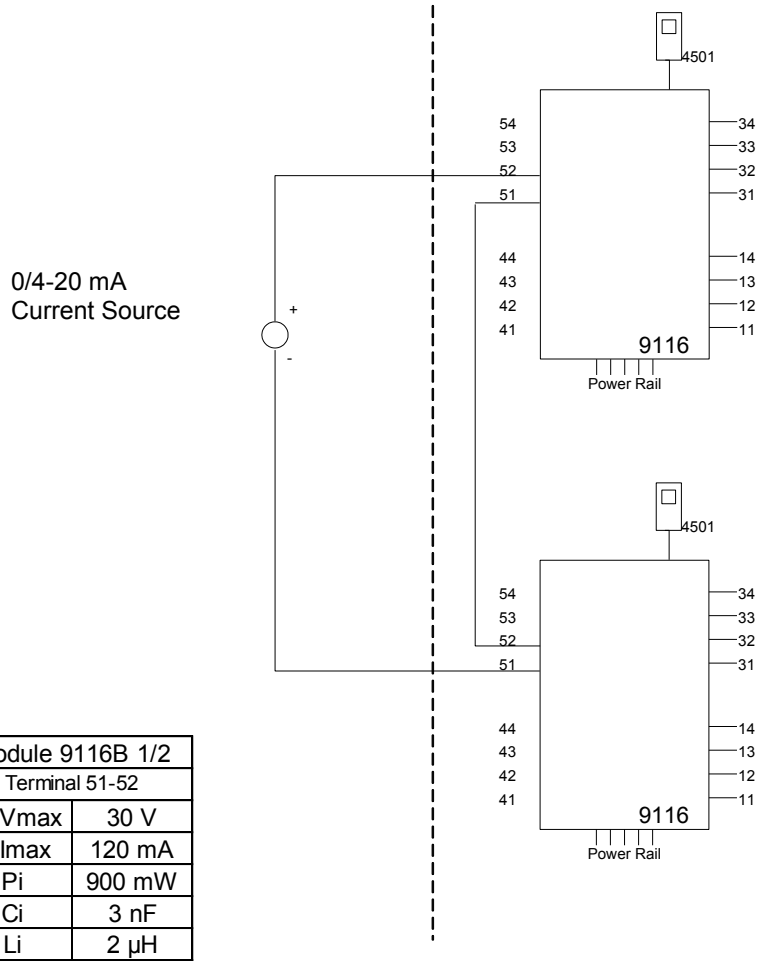


**Status relay, terminal (33,34)**

**Unclassified location installation:**
Voltage max: 125 VAC / 110 VDC
Power max: 62.5 VA / 32 W
Current max: 0.5 A AC / 0.3 ADC

**Zone 2 installation:**
Voltage max: 32 VAC/ 32 VDC
Power max: 16 VA / 32 W
Current max: 0.5 A AC / 1 A DC

**Relay output, terminal (13,14)**

**Unclassified location installation:**
Voltage max: 250 VAC / 30 VDC
Power max: 500 VA / 60 W
Current max: 2 A AC / 2 ADC

**Zone 2 installation**
Voltage max: 32 VAC / 30 VDC
Power max: 64 VA / 60 W
Current max: 2 A AC / 2 ADC

**(terminal 11,12,13,14)**
**(terminal 31,32,33,34)**
**(terminal 91,92,93,94,95)**
$U_m$: 253 V max. 400 Hz

| Module 9116B 1/2 | |
|---|---|
| Terminal 51-52 | |
| Ui, Vmax | 30 V |
| Ii, Imax | 120 mA |
| Pi | 900 mW |
| Ci | 3 nF |
| Li | 2 µH |

| Module 9116B 1/2 Terminals 51-52 | | Group | Co | Lo | Lo/Ro |
|---|---|---|---|---|---|
| Uo, Voc | 16.6 V | IIC or A,B | 0.4 µF | 100 mH | 25mH/Ω |
| Io, Isc | 0.2 mA | IIB or C,E,F | 2.3 µF | 100 mH | 100mH/Ω |
| Po | 0.8 mW | IIA or D,G | 9.5 µF | 100 mH | 200mH/Ω |

LERBAKKEN 10, 8410 RØNDE DENMARK

# INMETRO Desenhos para Instalação

Para instalação segura do 9116B. e 9116A. o manual seguinte deve ser observado. O módulo deve ser instalado somente por profissionais qualificados que estão familiarizados com as leis nacionais e internacionais, diretrizes e normas que se aplicam a esta área. Ano de fabricação pode ser obtido a partir dos dois primeiros dígitos do número de série

Para a instalação na Zona 2 o seguinte deve ser observado. O módulo de programação de 4501, deve ser utilizado apenas com os módulos PR electronics. É importante que o módulo esteja intacto e não tenha sido alterado ou modificado de qualquer maneira. Apenas os módulos 4501 livres de poeira e umidade devem ser instalados.

**INMETRO Certificado …… DEKRA 23.0006X**

**Marcas**: **9116B.**

[Ex ia Ga] IIC/IIB/IIA
[Ex ia Da] IIIC
[Ex ia Ma] I

**Marcas: 9116B., 9116A.** Ex ec nC IIC T4 Gc

**Normas:**

**ABNT NBR IEC 60079-0:2020 Versão Corrigida:2023**
**ABNT NBR IEC 60079-7:2018 Versão Corrigida:2022**
**ABNT NBR IEC 60079-11:2013 Versão Corrigida:2017**
**ABNT NBR IEC 60079-15:2019**

**Instalação 9116B. :**

Área de classificada
Zona 0, 1, 2, 20, 21 e 22

Área de não classificada
ou Zona 2

-20 ≤Ta ≤ +60ºC

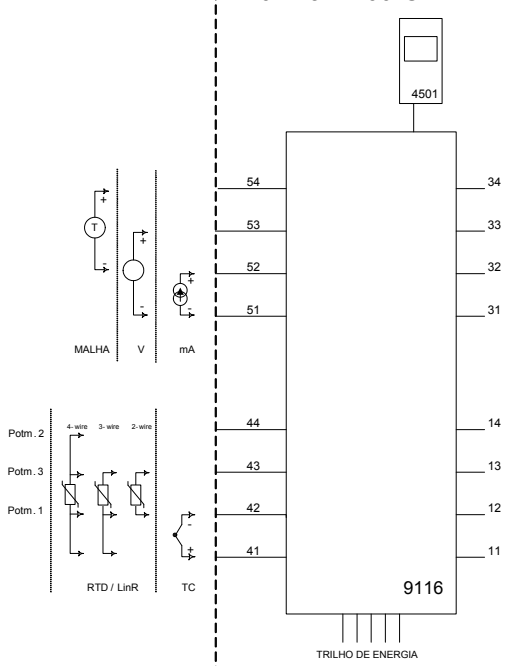


**Supply terminais (31,32)**
Voltagem: 19,2 – 31,2 VDC

**Relê de estado, terminais (33,34)**
**Instalação em Zona 2:**
Voltagem máx.: 32 VAC/ 32 VDC
Potência máx.: 16 VA / 32 W
Corrente máx.: 0,5 A AC / 1 A DC

**Relê de estado, terminais (13,14)**
**Instalação em Zona 2:**
Voltagem máx.: 32 VAC / 30 VDC
Potência máx.: 64 VA / 60 W
Corrente máx.:: 2 A AC / 2 ADC

**(terminais 11,12,13,14)**
**(terminais 31,32,33,34)**
**(terminais 91,92,93,94,95)**
$U_m$: 253 V; máx. 400 Hz

LERBAKKEN 10, 8410 RØNDE DENMARK

| Module 9116B1 | |
|---|---|
| Terminal 51-52, 51-53 | |
| Ui | 30 V |
| Ii | 120 mA |
| Pi | 900 mW |
| Ci | 3 nF |
| Li | 1 µH |

| Module 9116B2 | |
|---|---|
| Terminal 51-52, 51-53 | |
| Ui | 30 V |
| Ii | 120 mA |
| Pi | 900 mW |
| Ci | 3 nF |
| Li | 1 µH |

| Module 9116B1 Terminal 51-54, 52-54 | | Group | Co | Lo | Lo/Ro |
|---|---|---|---|---|---|
| Uo | 28 V | IIC | 80 nF | 4 mH | 54 µH/Ω |
| Io | 93 mA | IIB | 640 nF | 16 mH | 218 µH/Ω |
| Po | 650 mW | IIA | 2.1 µF | 32 mH | 436 µH/Ω |

| Module 9116B2 Terminal 51-54, 52-54 | | Group | Co | Lo | Lo/Ro |
|---|---|---|---|---|---|
| Uo | 21.4 V | IIC | 0.16 µF | 4 mH | 54 µH/Ω |
| Io | 93 mA | IIB | 1.13 µF | 16 mH | 218 µH/Ω |
| Po | 650 mW | IIA | 4.15 µF | 32 mH | 436 µH/Ω |

| Module 9116B1 Terminal 51-53 | | Group | Co | Lo | Lo/Ro |
|---|---|---|---|---|---|
| Uo | 28 V | IIC | 80 nF | 1000 mH | 4 mH/Ω |
| Io | 1.1 mA | IIB | 640 nF | 1000 mH | 17 mH/Ω |
| Po | 8 mW | IIA | 2.1 µF | 1000 mH | 35 mH/Ω |

| Module 9116B2 Terminal 51-53 | | Group | Co | Lo | Lo/Ro |
|---|---|---|---|---|---|
| Uo | 21.4 V | IIC | 0.16 µF | 1000 mH | 4 mH/Ω |
| Io | 1.1 mA | IIB | 1.13 µF | 1000 mH | 17 mH/Ω |
| Po | 8 mW | IIA | 4.15 µF | 1000 mH | 35 mH/Ω |

| Module 9116B1 Terminal 51-52 | | Group | Co | Lo | Lo/Ro |
|---|---|---|---|---|---|
| Uo | 8.3 V | IIC | 7 µF | 1000 mH | 100 mH/Ω |
| Io | 0.2 mA | IIB | 73 µF | 1000 mH | 400 mH/Ω |
| Po | 0.4 mW | IIA | 1000 µF | 1000 mH | 800 mH/Ω |
| | | | | | |
| Module 9116B1 Terminal 41,42,43,44 | | Group | Co | Lo | Lo/Ro |
| Uo | 8.3 V | IIC | 7 µF | 207 mH | 1 mH/Ω |
| Io | 13.1 mA | IIB | 73 µF | 828 mH | 5 mH/Ω |
| Po | 27.3 mW | IIA | 1000 µF | 1000 mH | 10 mH/Ω |

| Module 9116B2 Terminal 51-52 | | Group | Co | Lo | Lo/Ro |
|---|---|---|---|---|---|
| Uo | 8.3 V | IIC | 7 µF | 1000 mH | 100 mH/Ω |
| Io | 0.2 mA | IIB | 73 µF | 1000 mH | 400 mH/Ω |
| Po | 0.4 mW | IIA | 1000 µF | 1000 mH | 800 mH/Ω |
| | | | | | |
| Module 9116B2 Terminal 41,42,43,44 | | Group | Co | Lo | Lo/Ro |
| Uo | 8.3 V | IIC | 7 µF | 207 mH | 1 mH/Ω |
| Io | 13.1 mA | IIB | 73 µF | 828 mH | 5 mH/Ω |
| Po | 27.3 mW | IIA | 1000 µF | 1000 mH | 10 mH/Ω |

**Notas de instalação:**

Para o grupo I (minas), aplicam-se os parâmetros do grupo IIA.

Instalação em grau de poluição 2, categoria de sobretensão II conforme definido no IEC 60664-1.
Os circuitos não intrinsecamente seguros só pode ser connectado para sobretensão limitado ao categoria I/II como definido na IEC 60664-1.
Não separe conectores quando energizado ou quando uma mistura de gás explosivo estiver presente.
Não monte ou remova módulos do trilho de alimentação quando uma mistura de gás explosivo estiver presente.
Desligue a alimentação antes da manutenção.
A fiação de terminais sem uso não é permitida.

Em tipo de proteção [Ex ia Da] os parâmetros para a segurança intrínseca para grupo de gás IIB são aplicáveis.
Para a instalação em Zona 2, o módulo deve ser instalado em um invólucro conformidade com o tipo de proteção ‘Ex e’, fornecendo no mínimo grau de proteçao IP54.
Dispositivos de entrada de cabo e elementos de vedação devem cumprir com os mesmos requisitos.
Para a instalação de trilho de energia na Zona 2, apenas o trilho de alimentação Rail 9400 fornecido pela Unidade de Controle de Potência 9410 é permitido.

Máx. torque terminal de parafuso 0,5 Nm. O fio trançado deve ser instalado com um comprimento de isolamento de 5 mm ou através de um terminal isolado adequado, como um terminal de cadarço.

LERBAKKEN 10, 8410 RØNDE DENMARK

**Instalação 9116B.**

Área de classificada
Zona 0,1,2, 20, 21, 22

Área de não classificada
ou Zona 2

-20 ≤Ta ≤ +60ºC

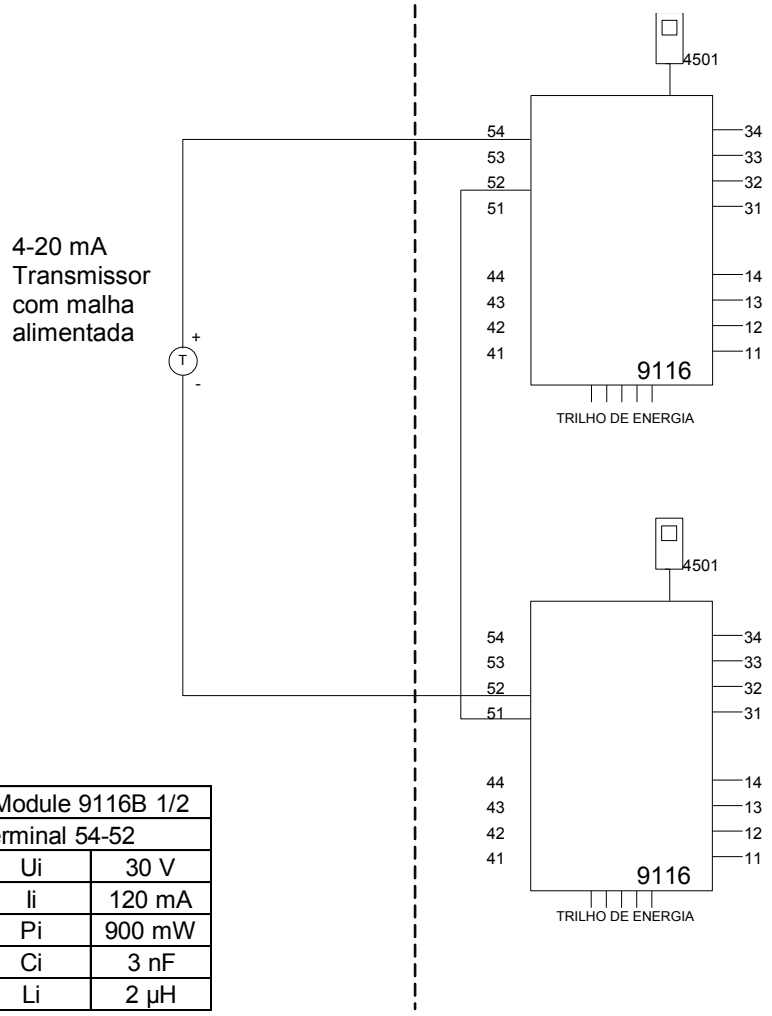


**Supply terminais (31,32)**
Voltagem: 19,2 – 31,2 VDC

**Relê de estado, terminais (33,34)**
**Instalação em Zona 2:**
Voltagem máx.: 32 VAC/ 32 VDC
Potência máx.: 16 VA / 32 W
Corrente máx.: 0,5 A AC / 1 A DC

**Rele de estado, terminais (13,14)**
**Instalação em Zona 2:**
Voltagem máx.: 32 VAC / 30 VDC
Potência máx.: 64 VA / 60 W
Corrente máx.:: 2 A AC / 2 ADC

**(terminais 11,12,13,14)**
**(terminais 31,32,33,34)**
**(terminais 91,92,93,94,95)**
$U_m$: 253 V; máx. 400 Hz

| Module 9116B 1/2 | |
|---|---|
| Terminal 54-52 | |
| Ui | 30 V |
| Ii | 120 mA |
| Pi | 900 mW |
| Ci | 3 nF |
| Li | 2 µH |

| Module 9116B1 Term. 54-52; 51-52 | | Group | Co | Lo | Lo/Ro |
|---|---|---|---|---|---|
| Uo | 28 V | IIC | 80 nF | 4 mH | 54 µH/Ω |
| Io | 93 mA | IIB | 640 nF | 16 mH | 218 µH/Ω |
| Po | 650 mW | IIA | 2.1 µF | 32 mH | 436 µH/Ω |

| Module 9116B2 Term. 54-52; 51-52 | | Group | Co | Lo | Lo/Ro |
|---|---|---|---|---|---|
| Uo | 21.4 V | IIC | 0.16 µF | 4 mH | 54 µH/Ω |
| Io | 93 mA | IIB | 1.13 µF | 16 mH | 218 µH/Ω |
| Po | 650 mW | IIA | 4.15 µF | 32 mH | 436 µH/Ω |

LERBAKKEN 10, 8410 RØNDE DENMARK

**Instalação 9116B.**

Área de classificada
Zona 0, 1, 2, 20, 21, 22

Área de não classificada
ou Zona 2

-20 ≤Ta ≤ +60ºC

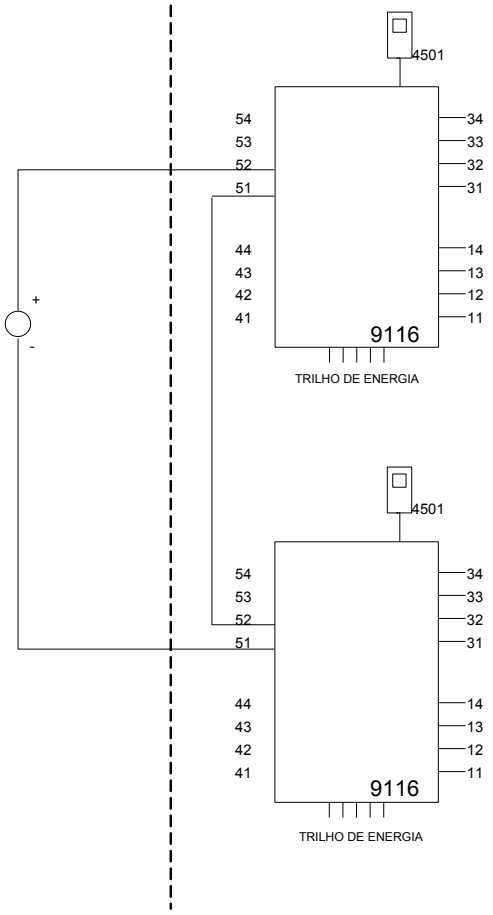


0/4-20 mA
Fonte de
Corrente

**Supply terminais (31,32)**
Voltagem: 19,2 – 31,2 VDC

**Relê de estado, terminais (33,34)**
**Instalação em Zona 2:**
Voltagem máx.: 32 VAC/ 32 VDC
Potência máx.: 16 VA / 32 W
Corrente máx.: 0,5 A AC / 1 A DC

**Rele de estado, terminais (13,14)**
**Instalação em Zona 2:**
Voltagem máx.: 32 VAC / 30 VDC
Potência máx.: 64 VA / 60 W
Corrente máx.:: 2 A AC / 2 ADC

**(terminais 11,12,13,14)**
**(terminais 31,32,33,34)**
**(terminais 91,92,93,94,95)**
$U_m$: 253 V máx. 400 Hz

| Module 9116B 1/2 | |
|---|---|
| Terminal 51-52 | |
| Ui | 30 V |
| Ii | 120 mA |
| Pi | 900 mW |
| Ci | 3 nF |
| Li | 2 µH |

| Module 9116B 1/2 Term. 52-51, 51-52 | | Group | Co | Lo | Lo/Ro |
|---|---|---|---|---|---|
| Uo | 16.6 V | IIC | 0.4 µF | 100 mH | 25mH/Ω |
| Io | 0.2 mA | IIB | 2.3 µF | 100 mH | 100mH/Ω |
| Po | 0.8 mW | IIA | 9.5 µF | 100 mH | 200mH/Ω |

LERBAKKEN 10, 8410 RØNDE DENMARK

**Instalação 9116A. :**

Área de não classificada
ou Zona 2

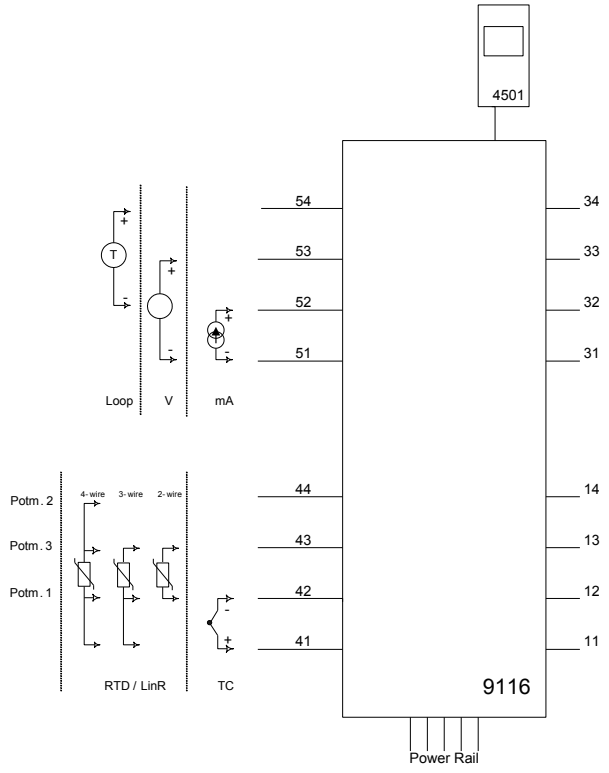


**Supply terminais (31,32)**
Voltagem: 19.2 – 31.2 VDC

**Relê de estado, terminais (33,34)**
**Instalação em Zona 2:**
Voltagem máx.: 32 VAC/ 32 VDC
Potência máx.: 16 VA / 32 W
Corrente máx.: 0,5 A AC / 1 A DC

**Rele de estado, terminais (13,14)**
**Instalação em Zona 2:**
Voltagem máx.: 32 VAC / 30 VDC
Potência máx.: 64 VA / 60 W
Corrente máx.:: 2 A AC / 2 ADC

Para instalação na Zona 2, o módulo deverá ser instalado em um invólucro no tipo de proteção Ex e, proporcionando um grau de proteção de pelo menos IP54. Os dispositivos de entrada de cabos e os elementos de obturação devem cumprir os mesmos requisitos.

Para instalação no Power Rail na Zona 2, somente o Power Rail tipo 9400 fornecido pela Unidade de Controle de Potência tipo 9410 (Certificado de Exame de Tipo IECEx KEM 08.0025X) é permitido.

O módulo de programação 4501 deve ser usado somente com módulos da PR Electronics. É importante que o módulo não esteja danificado e não tenha sido alterado ou modificado de forma alguma. Somente módulos 4501 livres de poeira e umidade deverão ser instalados.

# Document history

The following list provides notes concerning revisions of this document.

| Rev. ID | Date | Notes |
|---|---|---|
| 107 | 1848 | Release of the 9116xx-EMP version. |
| 108 | 2049 | 9116A-version included in manual.<br>CCOE approval discontinued.<br>New FM certificate and installation drawing. |
| 109 | 2103 | Routing diagram updated. |
| 110 | 2301 | ATEX and IECEx approvals updated - Ex nA changed to Ex ec.<br>UKEX approval added. |
| 111 | 2407 | ATEX / UKEX installation drawing updated - UKEX certificate for 9116B-EMP added.<br>INMETRO approval updated - Ex nA replaced by Ex ec. |
| 112 | 2436 | CCC approval added.<br>New EAC Ex certificate. |

# We are near you, *all over the world*

**Our trusted red boxes are supported wherever you are**

All our devices are backed by expert service and a 5-year warranty. With each product you purchase, you receive personal technical support and guidance, day-to-day delivery, repair without charge within the warranty period and easily accessible documentation.

We are headquartered in Denmark, and have offices and authorized partners the world over. We are a local business with a global reach. This means that we are always nearby and know your local markets well.
We are committed to your satisfaction and provide PERFORMANCE MADE SMARTER all around the world.

For more information on our warranty program, or to meet with a sales representative in your region, visit prelectronics.com.

# Benefit today from
# *PERFORMANCE MADE SMARTER*

PR electronics is the leading technology company specialized in making industrial process control safer, more reliable and more efficient. Since 1974, we have been dedicated to perfecting our core competence of innovating high precision technology with low power consumption. This dedication continues to set new standards for products communicating, monitoring and connecting our customers' process measurement points to their process control systems.

Our innovative, patented technologies are derived from our extensive R&D facilities and from having a great understanding of our customers' needs and processes. We are guided by principles of simplicity, focus, courage and excellence, enabling some of the world's greatest companies to achieve PERFORMANCE MADE SMARTER.