9106A / 9106B

9106A 9106B

DK

ADVARSEL

GENERELT

Dette modul er beregnet for tilslutning til livsfarlige elektriske spændinger. Hvis denne advarsel ignoreres, kan det føre til alvorlig legemsbeskadigelse eller mekanisk ødelæggelse.

For at undgå faren for elektriske stød og brand skal sikkerhedsreglerne overholdes, og vejledningerne skal følges.

Specifikationerne må ikke overskrides, og modulet må kun benyttes som beskrevet i det følgende.

Installationsvejledningen skal studeres omhyggeligt, før modulet tages i brug. Kun kvalificeret personale (teknikere) må installere dette modul. Hvis modulet ikke benyttes som beskrevet i denne installationsvejledning, så forringes modulets beskyttelsesforanstaltninger.

ADVARSEL

FARLIG SPÆNDING

Der må ikke tilsluttes farlig spænding til modulet, før dette er fastmonteret, og følgende operationer bør kun udføres på modulet i spændingsløs tilstand og under ESD-sikre forhold:

Installation, ledningsmontage og -demontage.

Fejlfinding på modulet.

Reparation af modulet og udskiftning af sikringer må kun foretages af PR electronics A/S.

ADVARSEL

Modulets frontplade må ikke åbnes, da dette vil medføre skade på stikforbindelsen til display- / programmeringsfronten PR 45xx. Modulerne indeholder ingen DIP-switche eller jumpere.

SIKKERHEDSREGLER

Modtagelse og udpakning

Udpak modulet uden at beskadige det. Kontrollér ved modtagelsen, at modultypen svarer til den bestilte. Indpakningen bør følge modulet, indtil dette er monteret på blivende plads.

Miljøforhold

Undgå direkte sollys, kraftigt støv eller varme, mekaniske rystelser og stød, og udsæt ikke modulet for regn eller kraftig fugt. Om nødvendigt skal opvarmning, ud over de opgivne grænser for omgivelsestemperatur, forhindres ved hjælp af ventilation.

Alle moduler kan anvendes i Måle- / overspændingskategori II og Forureningsgrad 2. Modulerne er designet til at være sikker mindst op til en højde af 2000 m.

Installation

Modulet må kun tilsluttes af kvalificerede teknikere, som er bekendte med de tekniske udtryk, advarsler og instruktioner i installationsvejledningen, og som vil følge disse.

Hvis der er tvivl om modulets rette håndtering, skal der rettes henvendelse til den lokale forhandler eller alternativt direkte til PR electronics A/S.

Det er ikke tilladt at benytte flerkoret ledning ved tilslutning af forsyningsspænding med mindre ledningsenderne er forsynet med ledningstyller.

Beskrivelse af indgang / udgang og forsyningsforbindelser findes i produktmanualen og på sideskiltet.

Modulet er forsynet med skrueterminaler og skal forsynes fra en dobbeltisoleret/ forstærket isoleret spændingsforsyning. En afbryder placeres let tilgængeligt og tæt ved modulet. Afbryderen skal mærkes således, at der ikke er tvivl om, at den afbryder spændingen til modulet.

Ved installation på Power Rail 9400 bliver forsyningsspændingen leveret af Power Control Unit type 9410.

Kalibrering og justering

Under kalibrering og justering skal måling og tilslutning af eksterne spændinger udføres i henhold til denne installationsvejledning, og teknikeren skal benytte sikkerhedsmæssigt korrekte værktøjer og instrumenter.

Betjening under normal drift

Operatører må kun indstille eller betjene modulerne, når disse er fast installeret på forsvarlig måde i tavler el. lignende, så betjeningen ikke medfører fare for liv eller materiel. Dvs., at der ikke er berøringsfare, og at modulet er placeret, så det er let at betjene.

Rengøring

Modulet må, i spændingsløs tilstand, rengøres med en klud let fugtet med destilleret vand.

Eletriske specifikationer

Specifikationsområde	-20°C til +60°C
Forsyningsspænding	19,2...31,2 VDC
Max. forbrug, 1 / 2 kanaler	≤ 1,1 W / 1,9 W
Max. effekttab, 1 / 2 kn.	≤ 0,8 W / 1,2 W
Sikring	400 mA T / 250 VAC
Isolationsspænding, test / drift	2,6 kVAC / 300 VAC
Isolation, udgang 1 til udgang 2	1,5 kVAC / 150 VAC
Isolation - relæ til forsyning	1,5 kVAC / 150 VAC (forstærket isolation)
Kalibreringstemperatur	20...28°C
EMC-immunitetspåvirkning	< ±0,5% af span
Udvidet EMC-immunitet: NAMUR NE21, A-krit., gniststøj	< ±1% af span
2-trådsforsyning (klemme 44...43)	25...16 VDC / 0...20 mA
Relativ luftfugtighed	< 95% RH (ikke kond.)
Mål, uden displayfront (HxBxD)	109 x 23,5 x 104 mm
Mål, med 4501 / 451x (HxBxD)	109 x 23,5 x 116 / 131 mm
Kapslingsklasse	IP20

Strømindgang

Programmerbare måleområder	3,5...23 mA
Indgangsmodstand	Nom. 20 Ω + PTC 50 Ω

Strømudgang

Program. signalområder	3,5...23 mA
Belastning	≤ 600 Ω
Belastningsstabilitet	≤ 0,01% af span / 100 Ω
Strømbegrænsning	≤ 28 mA

Statusrelæ udgangsklemme 33-34

Max. spænding	110 VDC / 125 VAC
Max. strøm	0,3 ADC / 0,5 AAC
Max. spænding, Ex-installationer	32 VDC / 32 VAC
Max. strøm, Ex-installationer	1 ADC / 0,5 AAC

Godkendelser

DNV-GL, Marine	TAA00000JD
ClassNK	TA18527M
c UL us, UL 61010-1	E314307
EAC	TR-CU 020/2011
EAC LVD	TR-CU 004/2011
EAC Ex	TR-CU 012/2011
SIL	IEC 61508

Overholdte myndighedskrav

EMC	2014/30/EU
LVD	2014/35/EU
ATEX	2014/34/EU
RoHS	2011/65/EU

UK

WARNING

GENERAL

This device is designed for connection to hazardous electric voltages. Ignoring this warning can result in severe personal injury or mechanical damage.

To avoid the risk of electric shock and fire, the safety instructions of this guide must be observed and the guidelines followed. The specifications must not be exceeded, and the device must only be applied as described in the following.

Prior to the commissioning of the device, this installation guide must be examined carefully.

Only qualified personnel (technicians) should install this device. If the equipment is used in a manner not specified by the manufacturer, the protection provided by the equipment may be impaired.

WARNING

HAZARDOUS VOLTAGE

Until the device is fixed, do not connect hazardous voltages to the device.

The following operations should only be carried out on a disconnected device and under ESD safe conditions:

General mounting, connection and disconnection of wires.

Troubleshooting the device.

Repair of the device and replacement of circuit breakers must be done by PR electronics A/S only.

WARNING

Do not open the front plate of the device as this will cause damage to the connector for the display / programming front PR 45xx. The SYSTEM 9000 devices contain no DIP-switches or jumpers.

SAFETY INSTRUCTIONS

Receipt and unpacking

Unpack the device without damaging it. The packing should always follow the device until this has been permanently mounted. Check at the receipt of the device whether the type corresponds to the one ordered.

Environment

Avoid direct sunlight, dust, high temperatures, mechanical vibrations and shock, as well as rain and heavy moisture. If necessary, heating in excess of the stated limits for ambient temperatures should be avoided by way of ventilation.

All devices can be used for Measurement / Overvoltage Category II and Pollution Degree 2. The modules are designed to be safe at least under an altitude up to 2000 m.

Mounting

Only qualified technicians who are familiar with the technical terms, warnings, and instructions in this installation guide and who are able to follow these should connect the device.

Should there be any doubt as to the correct handling of the device, please contact your local distributor or, alternatively, **PR electronics A/S.**

The use of stranded wires is not permitted for mains wiring except when wires are fitted with cable ends.

Descriptions of input / output and supply connections are shown in the product manual and on the side label.

The device is provided with field wiring terminals and shall be supplied from a Power Supply having double/reinforced insulation. A power switch shall be easily accessible and close to the device. The power switch shall be marked as the disconnecting unit for the device.

For installation on Power Rail 9400 the power is supplied by Power Control Unit 9410.

Calibration and adjustment

During calibration and adjustment, the measuring and connection of external voltages must be carried out according to the specifications of this installation guide. The technician must use tools and instruments that are safe to use.

Normal operation

Operators are only allowed to adjust and operate devices that are safely fixed in panels, etc., thus avoiding the danger of personal injury and damage. This means there is no electrical shock hazard, and the device is easily accessible.

Cleaning

When disconnected, the device may be cleaned with a cloth moistened with distilled water.

Electrical specifications

Specifications range	-20°C to +60°C
Supply voltage	19.2...31.2 VDC
Max. required power, 1 / 2 ch.	≤ 1.1 W / 1.9 W
Max. power dissipation, 1 / 2 ch.	≤ 0.8 W / 1.2 W
Fuse	400 mA SB / 250 VAC
Isolation voltage, test / operation	2.6 kVAC / 300 VAC
Isolation, output 1 to output 2	1.5 kVAC / 150 VAC
Isolation - relay to supply	1.5 kVAC / 150 VAC (reinforced isolation)
Calibration temperature	20...28°C
EMC immunity influence	< ±0.5% of span
Extended EMC immunity: NAMUR NE21, A criterion, burst	< ±1% of span
2-wire supply (terminal 44...43)	25...16 VDC / 0...20 mA
Relative humidity	< 95% RH (non-cond.)
Dimensions (HxWxD)	109 x 23.5 x 104 mm
Dimensions (HxWxD) w/ 4501 / 451x	109 x 23.5 x 116 / 131 mm
Protection degree	IP20

Current input

Programmable measurement ranges	3.5...23 mA
Input resistance	Nom. 20 Ω + PTC 50 Ω

Current output

Programmable signal ranges	3.5...23 mA
Load	≤ 600 Ω
Load stability	≤ 0.01% of span / 100 Ω
Current limit	≤ 28 mA

Status relay output terminal 33-34

Max. voltage	110 VDC / 125 VAC
Max. current	0.3 ADC / 0.5 AAC
Max. voltage, hazardous installation	32 VDC / 32 VAC
Max. current, hazardous installation	1 ADC / 0.5 AAC

Approvals

DNV-GL, Marine	TAA00000JD
ClassNK	TA18527M
c UL us, UL 61010-1	E314307
EAC	TR-CU 020/2011
EAC LVD	TR-CU 004/2011
EAC Ex	TR-CU 012/2011
SIL	IEC 61508

Observed authority requirements

EMC	2014/30/EU
LVD	2014/35/EU
ATEX	2014/34/EU
RoHS	2011/65/EU

FR

AVERTISSEMENT

INFORMATIONS GENERALES

Ce module est conçu pour supporter une connexion à des tensions électriques dangereuses. Si vous ne tenez pas compte de cet avertissement, cela peut causer des dommages corporels ou des dégâts mécaniques.

Pour éviter les risques d'électrocution et d'incendie, conformez-vous aux consignes de sécurité et suivez les instructions mentionnées dans ce guide. Vous devez vous limiter aux spécifications indiquées et respecter les instructions d'utilisation de ce module, telles qu'elles sont décrites dans ce guide.

Il est nécessaire de lire ce guide attentivement avant de mettre ce module en marche.

L'installation de ce module est réservée à un personnel qualifié (techniciens). Si la méthode d'utilisation de l'équipement diffère de celle décrite par le fabricant, la protection assurée par l'équipement risque d'être altérée.

AVERTISSEMENT

TENSION DANGEREUSE

Tant que le module n'est pas fixé, ne le mettez pas sous tensions dangereuses. Les opérations suivantes doivent être effectuées avec le module débranché et dans un environnement exempt de décharges électrostatiques (ESD):

Montage général, raccordement et débranchement de fils

Recherche de pannes sur le module.

Seule PR electronics SARL est autorisée à réparer le module et à remplacer les fusibles.

AVERTISSEMENT

Ne pas ouvrir la plaque avant du module au risque d'endommager le connecteur de l'indicateur / la façade de programmation PR 45xx. Les modules ne contiennent ni de commutateurs DIP ni de cavaliers.

CONSIGNES DE SECURITE

Réception et déballage

Déballez le module sans l'endommager. Il est recommandé de conserver l'emballage du module tant que ce dernier n'est pas définitivement monté. A la réception du module, vérifiez que le type de module reçu correspond à celui que vous avez commandé.

Environnement

N'exposez pas votre module aux rayons directs du soleil et choisissez un endroit à l'humidité modérée et à l'abri de la poussière, des températures élevées, des chocs et des vibrations mécaniques et de la pluie. Le cas échéant, des systèmes de ventilation permettent d'éviter qu'une pièce soit chauffée au-delà des limites prescrites pour les températures ambiantes.

Tous les modules peuvent être installés dans catégorie de mesure / surtension II et degré de pollution 2. Ce module est conçu pour fonctionner en toute sécurité sous une altitude inférieure à 2000 m.

Montage

Il est conseillé de réserver le raccordement du module aux techniciens qualifiés qui connaissent les termes techniques, les avertissements et les instructions de ce guide et qui sont capables d'appliquer ces dernières.

Si vous avez un doute quelconque quant à la manipulation du module, veuillez contacter votre distributeur local. Vous pouvez également vous adresser à **PR electronics SARL.**

Pour le raccordement électrique de l'alimentation générale, il est possible d'utiliser des fils multibrins seulement s'ils possèdent des embouts de câblage.

Les connexions des alimentations et des entrées / sorties sont décrites dans le manuel du produit et sur l'étiquette de la face latérale du module.

Les appareils sont équipés de borniers à vis et doivent être raccordés à une alimentation qui a une isolation double ou renforcée. L'interrupteur doit être à proximité du module et facile d'accès. Ce bouton doit être étiqueté avec la mention : peut couper la tension du module.

Pour une installation sur le rail d'alimentation 9400, le module sera alimenté par le contrôleur d'alimentation 9410.

Etalonnage et réglage

Lors des opérations d'étalonnage et de réglage, il convient d'effectuer les mesures et les connexions des tensions externes en respectant les spécifications mentionnées dans ce guide. Les techniciens doivent utiliser des outils et des instruments pouvant être manipulés en toute sécurité.

Manipulations ordinaires

Les opérateurs sont uniquement autorisés à régler et faire fonctionner des modules qui sont solidement fixés sur des platines des tableaux, ect., afin d'écarter les risques de dommages corporels. Autrement dit, il ne doit exister aucun danger d'électrocution et le module doit être facilement accessible.

Maintenance et entretien

Une fois le module hors tension, prenez un chiffon imbibé d'eau distillée pour le nettoyer.

Spécifications

Plage de température	-20° à +60°C
Tension d'alimentation	19,2...31,2 Vcc
Puissance nécessaire max., 1 / 2 voies	≤ 1,1 W / 1,9 W
Puissance dissipée max., 1 / 2 voies	≤ 0,8 W / 1,2 W
Fusible	400 mA SB / 250 Vca
Tension d'isolation, test / opération	2,6 kVca / 300 Vca
Isolation - sortie 1 à sortie 2	1,5 kVca / 150 Vca
Isolation - relais à l'alimentation	1,5 kVca / 150 Vca (isolation renforcée)
Température d'étalonnage	20...28°C
Immunité CEM	< ±0,5% de l'échelle
Immunité CEM améliorée : NAMUR NE21, critère A, burst	< ±1% de l'échelle
Alimentation 2-fils (bornes 44...43)	25...16 Vcc / 0...20 mA
Humidité relative	< 95% HR (sans cond.)
Dimensions (HxLxP)	109 x 23,5 x 104 mm
Dimensions (HxLxP) avec 4501 / 451x	109 x 23,5 x 116 / 131 mm
Degré de protection	IP20

Entrée courant

Gammes de mesure program.	3,5...23 mA
Résistance d'entrée	Nom. 20 Ω + PTC 50 Ω

Sortie courant

Gammes de signal program.	3,5...23 mA
Charge	≤ 600 Ω
Stabilité de charge	≤ 0,01% de l'EC / 100 Ω
Limite de courant	≤ 28 mA

Sortie du relais d'état, borne 33-34

Tension max.	110 Vcc / 125 Vca
Courant max.	0,3 Acc / 0,5 Aca
Tension max., installation dangereuse	32 Vcc / 32 Vca
Courant max., installation dangereuse	1 Acc / 0,5 Aca

Approbations

DNV-GL, Marine	TAA00000JD
ClassNK	TA18527M
c UL us, UL 61010-1	E314307
EAC	TR-CU 020/2011
EAC LVD	TR-CU 004/2011
EAC Ex	TR-CU 012/2011
SIL	IEC 61508

Compatibilité avec les normes

CEM	2014/30/UE
DBT	2014/35/UE
ATEX	2014/34/UE
RoHS	2011/65/UE

DE

WARNUNG

ALLGEMEINES

Dieses Gerät ist für den Anschluss an lebensgefährliche elektrische Spannungen gebaut. Missachtung dieser Warnung kann zu schweren Verletzungen oder mechanischer Zerstörung führen. Um eine Gefährdung durch Stromstöße oder Brand zu vermeiden müssen die Sicherheitsregeln der Installationsanleitung eingehalten, und die Anweisungen befolgt werden. Die Spezifikationswerte dürfen nicht überschritten werden, und das Gerät darf nur gemäß folgender Beschreibung benutzt werden. Diese Installationsanleitung ist sorgfältig durchzulesen, ehe das Gerät in Gebrauch genommen wird. Nur qualifizierte Personen (Techniker) dürfen dieses Gerät installieren. Wenn das Gerät nicht wie in dieser Installationsanleitung beschrieben benutzt wird, werden die Schutzeinrichtungen des Gerätes beeinträchtigt.

WARNUNG

GEFÄHRLICHE SPANNUNG

Vor dem abgeschlossenen festen Einbau des Gerätes darf daran keine gefährliche Spannung angeschlossen werden, und folgende Maßnahmen sollten nur in spannungslosem Zustand des Gerätes und unter ESD-sicheren Verhältnisse durchgeführt werden:

Installation, Montage und Demontage von Leitungen.

Fehlersuche im Gerät.

Reparationen des Gerätes und Austausch von Sicherungen dürfen nur von PR electronics A/S vorgenommen werden.

WARNUNG

Die Frontplatte des Gerätes darf nicht geöffnet werden, weil hierdurch die Kontakte zur Kontaktierung des frontdisplays 45xx beschädigt werden können. Die Geräte enthalten keine internen DIP-Schalter oder Programmierbrücken.

SICHERHEITSREGELN

Empfang und Auspacken

Packen Sie das Gerät aus, ohne es zu beschädigen, und kontrollieren Sie beim Empfang, ob der Gerätetyp Ihrer Bestellung entspricht. Die Verpackung sollte beim Gerät bleiben, bis dieses am endgültigen Platz montiert ist.

Umgebungsbedingungen

Direkte Sonneneinstrahlung, starke Staubentwicklung oder Hitze, mechanische Erschütterungen und Stöße sind zu vermeiden; das Gerät darf nicht Regen oder starker Feuchtigkeit ausgesetzt werden. Bei Bedarf muss eine Erwärmung, welche die angegebenen Grenzen für die Umgebungstemperatur überschreitet, mit Hilfe eines Kühlgebläses verhindert werden.

Alle Geräte können für Mess- / Überspannungskategorie II und Verschmutzungsgrad 2 benutz werden. Das Gerät ist so konzipiert, dass es auch in einer Einsatzhöhe von bis zu 2000 m noch sicher funktioniert.

Installation

Das Gerät darf nur von qualifizierten Technikern angeschlossen werden, die mit den technischen Ausdrücken, Warnungen und Anweisungen in dieser Installationsanleitung vertraut sind und diese befolgen.

Sollten Zweifel bezüglich der richtigen Handhabung des Gerätes bestehen, sollte man mit dem Händler vor Ort Kontakt aufnehmen. Sie können aber auch direkt mit PR electronics GmbH Kontakt aufnehmen.

Der Einsatz von verdrillter Leitung ist nicht erlaubt außer die Enden sind mit Aderendhülsen versehen.

Eine Beschreibung von Eingangs- / Ausgangs- und Versorgungsanschlüssen befindet sich a im Produktmanual und auf dem Typenschild.

Das Gerät ist mit Feldverdrahtungsklemmen ausgestattet und wird von einem Netzteil mit doppelter / verstärkter Isolierung versorgt. Der Netzschalter sollte leicht zugänglich und in der Nähe des Gerätes sein. Der Netzschalter sollte mit einem Schild gekennzeichnet sein, auf dem steht, dass durch Betätigung dieses Schalters das Gerät vom Netz genommen wird.

Für den Anschluss auf der Power Rail 9400 wird das Gerät über das Power Control Unit 9410 versorgt.

Kalibrierung und Justierung

Während der Kalibrierung und Justierung sind die Messung und der Anschluss externer Spannungen entsprechend dieser Installationsanleitung auszuführen, und der Techniker muss hierbei sicherheitsmäßig einwandfreie Werkzeuge und Instrumente benutzen.

Bedienung im Normalbetrieb

Das Bedienungspersonal darf das Gerät nur dann einstellen oder bedienen, wenn diese auf vertretbare Weise in Schalttafeln o. ä. fest installiert sind, sodass die Bedienung keine Gefahr für Leben oder Material mit sich bringt. D. h., es darf keine Gefahr durch Berührung bestehen, und das Gerät muss so plaziert sein, dass es leicht zu bedienen ist.

Reinigung

Das Gerät darf in spannungslosem Zustand mit einem Lappen gereinigt werden, der mit destilliertem Wasser leicht angefeuchtet ist.

Elektrische Daten

Umgebungstemperatur	-20°C bis +60°C
Versorgungsspannung	19,2...31,2 VDC
Leistungsbedarf, max., 1 / 2 Kan.	≤ 1,1 W / 1,9 W
Max. Verlustleistung, 1 / 2 Kan.	≤ 0,8 W / 1,2 W
Sicherung	400 mA T / 250 VAC
Isolationsspannung, Test/Betrieb	2,6 kVAC / 300 VAC
Isolierung, Ausg. 1 zum Ausg. 2	1,5 kVAC / 150 VAC
Isolierung - Relais zur Versorg.	1,5 kVAC / 150 VAC (erhöhte isolation)
Kalibrierungstemperatur	20...28°C
EMV Störspannungseinfluss	< ±0,5% d. Messsp.
Erweitere EMV Störfestigkeit: NAMUR NE21, Kriterium A, Burst	< ±1% d. Messspanne
2-Draht-Versorgung (Klemme 44...43)	25...16 VDC / 0...20 mA
Relative Luftfeuchtigkeit	< 95% RH (nicht kond.)
Abmessungen (HxBxT)	109 x 23,5 x 104 mm
Abmessungen (HxBxT) mit 4501 / 451x	109 x 23,5 x 116 / 131 mm
Schutzart	IP20

Stromeingang

Program. Messbereiche	3,5...23 mA
Eingangswiderstand	Nom. 20 Ω + PTC 50 Ω

Stromausgang

Program. Signalbereiche	3,5...23 mA
Belastung	≤ 600 Ω
Belastungsstabilität	≤ 0,01% d. Sp. / 100 Ω
Strombegrenzung	≤ 28 mA

Statusrelais Ausgang Klemme 33-34

Max. Spannung	110 VDC / 125 VAC
Max. Strom	0,3 ADC / 0,5 AAC
Max. Spannung, ATEX-Anwendungen	32 VDC / 32 VAC
Max. Strom, ATEX-Anwendungen	1 ADC / 0,5 AAC

Zulassungen

DNV-GL, Marine	TAA00000JD
ClassNK	TA18527M
c UL us, UL 61010-1	E314307
EAC	TR-CU 020/2011
EAC LVD	TR-CU 004/2011
EAC Ex	TR-CU 012/2011
SIL	IEC 61508

Eingehaltene Behördenvorschriften

EMV	2014/30/EU
LVD	2014/35/EU
ATEX	2014/34/EU
RoHS	2011/65/EU

	DK	UK	FR	DE
A	Indgangssignaler	Input signals	Signaux d'entrée	Eingangssignale
B	Udgangssignaler	Output signals	Signaux de sortie	Ausgangssignale
C	2-trådstransmitter	2-wire transmitter	Transmetteur 2-fils	2-Draht-Messumformer
D	Strøm	Current	Courant	Strom
E	4...20 mA udgang	4...20 mA output	Sortie 4...20 mA	4...20 mA Ausgang
F	2-tråds 4...20 mA udgang	2-wire 4...20 mA output	Sortie 2-fils 4...20 mA	2-Draht-Ausgang 4...20 mA
G	Forsyning -	Supply -	Alimentation -	Versorgung -
H	Forsyning +19,2...31,2 VDC	Power supply +19.2...31.2 VDC	Alimentation +19,2...31,2 Vcc	2-Draht-Ausgang +19,2...31,2 VDC
I	Modulstatus	Device status	Etat du module	Gerätestatus
J	Forsyning via power rail	Power supply via power rail	Alimentation par rail	Versorgung über Power Rail
Ch.1	Kanal 1	Channel 1	Voie 1	Kanal 1
Ch.2	Kanal 2	Channel 2	Voie 2	Kanal 2
N.C.	Normalt lukket	Normally closed	Normalement fermé	Öffner

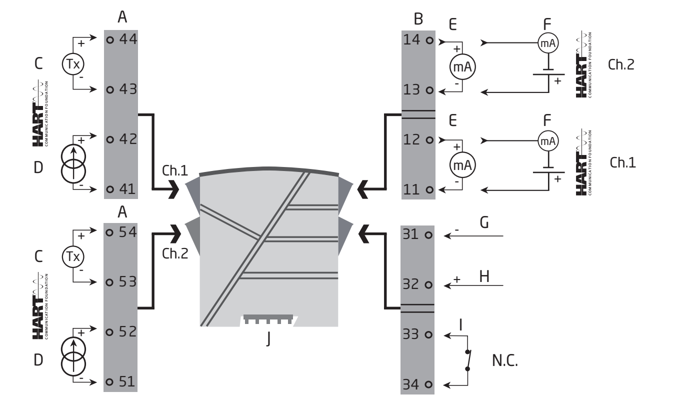

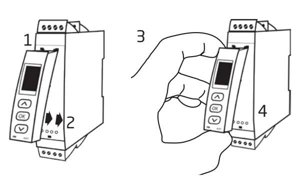

DK Påsætning af PR 45xx:
1: Indsæt tappene på 45xx i hullerne øverst på modulet.
2: Sving 45xx på plads.
Aftagning af 45xx:
3/4: Tryk på udløserknap i bunden af 45xx og sving 45xx op.

UK Mounting of PR 45xx:
1: Insert the tabs of the PR 45xx into the holes at the top of the device.
2: Hinge the PR 45xx down until it snaps into place.
Demounting of the PR 45xx
3: Push the release button on the bottom of the PR 45xx and hinge the the PR 45xx out and up.
4: With the PR 45xx hinged up, remove from holes at the top of the device.

FR Montage du PR 45xx:
1: Insérez les crochets du 45xx dans les trous en haut du module.
2: Poussez le bas du 45xx vers le module.
Démontage du 45xx:
3/4: Appuyez sur le bouton de déclenchement en dessous du 45xx, puis tirez le 45xx vers le haut.

DE Anbringen des PR 45xx:
1: Einbringen der beiden Fixierstifte des PR 45xx in die Öffnungen an der oberen Frontplatte des Gerätes.
2: Das Display 45xx an der Unterkante einrasten lassen.
Entfernen des PR 45xx:
3/4: Die Entriegelung des 45xx an der Unterseite betätigen und das 45xx vorsichtig abnehmen.

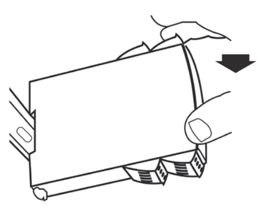

DK Montering på power rail / DIN-skinne.

UK Mounting on power rail / DIN rail.

FR Montage sur rail d'alimentation / rail DIN.

DE Montage auf Power Rail / DIN-Schiene.

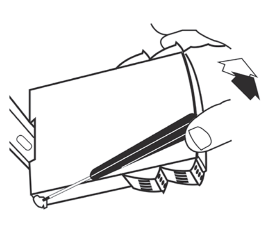

DK **Frigørelse fra power rail / DIN-skinne**
Husk først at demontere tilslutningsklemmerne med farlig spænding. Modulet frigøres fra skinnen ved at løfte i den nederste lås.

UK **Demounting from power rail / DIN rail**
First, remember to demount the connectors with hazardous voltages. Detach the device from the rail by lifting the bottom lock.

FR **Démontage du rail d'alimentation / rail DIN**
Tout d'abord, n'oubliez pas de démonter les connecteurs où règnent des tensions dangereuses. Débloquez le verrou inférieur pour dégager le module du rail.

DE **Lösen von Power Rail / DIN-Schiene**
Zunächst ist gefährliche Spannung von den Anschlussklemmen zu trennen. Das Gerät wird von der Schiene gelöst, indem man den unteren Verschluss löst.

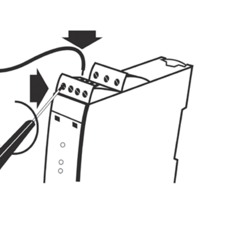

DK En eller to ledninger med (min....max.) ledningskvadrat 0,13...2,08 mm² / AWG 26...14 flerkoret ledning. Max. klemskruetilspændingsmoment 0,5 Nm.

UK One or two wires with (min....max.) wire size 0.13...2.08 mm² / AWG 26...14 stranded wire. Max. screw terminal torque 0.5 Nm.

FR Une ou deux fils avec taille des fils (min....max.) 0,13...2,08 mm² / AWG 26...14 fils multibrins. Pression max. avant déformation de la vis 0,5 Nm.

DE Ein oder zwei Leiter mit (min....max.) Leitungsquerschnitt 0,13...2,08 mm² / AWG 26...14 Litzendraht. Max. Klemmschraubenanzugsmoment 0,5 Nm.

DK Sideskilt — UK Side label — FR Etiquette — DE Typenschild

DK Typenr. / UK Type no. / FR No. de type. / DE Typennr.

DK Produktionsår fremgår af de to første cifre i serienummeret.
UK Year of manufacture can be taken from the first two digits in the serial number.
FR L'année de production est définie grace aux deux premiers chiffres du numéro de série.
DE Die ersten beiden Ziffern der Seriennummer geben das Produktionsjahr an.

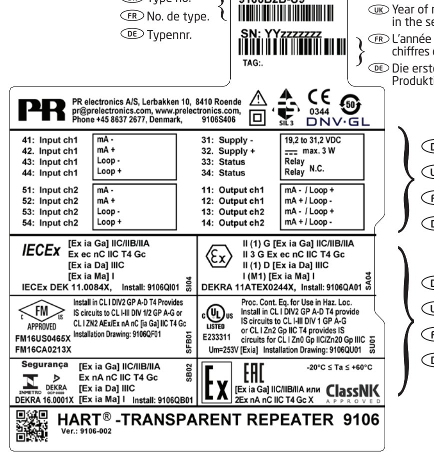

DK Benforbindelser. / UK Pin connections. / FR Raccordement des bornes. / DE Klemmenanschluss.

DK Godkendelser. / UK Approvals. / FR Homologations. / DE Zulassungen.

DK Ex-godkendelser — UK I.S approvals — FR Approbations S.I. — DE Ex-Zulassungen

	9106Bxxx		9106Axxx	
IECEx	[Ex ia Ga] IIC/IIB/IIA Ex ec nC IIC T4 Gc [Ex ia Da] IIIC [Ex ia Ma] I	IECEx DEK 11.0084 X Installation Drawing: 9106QI01	Ex ec nC IIC T4 Gc	IECEx DEK 11.0084 X Installation Drawing: 9106QI01
ATEX	II (1) G [Ex ia Ga] IIC/IIB/IIA II 3 G Ex ec nC IIC T4 Gc II (1) D [Ex ia Da] IIIC I (M1) [Ex ia Ma] I	DEKRA 11ATEX0244 X Installation Drawing: 9106QA01	II 3 G Ex ec nC IIC T4 Gc	DEKRA 11ATEX0244 X Installation Drawing: 9106QA01
FM	Install in CL I, Div. 2, Gr. A-D T4 Provides IS circuits to CL I-III, Div. 1/2, Gr. A-G or CL I, Zn2 AEx/Ex nA nC [ia] IIC T4	FM16US0465X / FM16CA0213X Installation Drawing: 9106QF01	Install in CL I, Div. 2, Gr. A-D T4 or CL I, Zone 2, AEx nA nC IIC T4	FM16US0465X / FM16CA0213X Installation Drawing: 9106QF01
INMETRO	[Ex ia Ga] IIC/IIB/IIA [Ex ia Da] IIIC [Ex ia Ma] I Ex nA nC IIC T4 Gc	DEKRA 16.0001X Installation Drawing: 9106QB01	-	-
UL (9106Axxx-U9 / 9106Bxxx-U9)	Install in CL I DIV2 GP A-D T4 provides IS circuits to CL I-III DIV 1 GP A-G or install in CL I Zn2 Gp IIC T4 provides IS circuits to CL I Zn0 Gp IIC/Zn20 Gp IIIC	E233311 Installation Drawing: 9106QU01	Install in CL I, Div. 2, Gr. A-D T4 or CL I, Zone 2, AEx nA nC IIC T4	E233311 Installation Drawing: 9106QU01

9106QA01

LERBAKKEN 10, 8410 RØNDE DENMARK

ATEX Installation drawing

For safe installation of 9106 the following must be observed. The module shall only be installed by qualified personnel who are familiar with the national and international laws, directives and standards that apply to this area.
Year of manufacture can be taken from the first two digits in the serial number.

For Installation in Zone 2 the following must be observed.
The 4501 programming module is to be used solely with PR electronics modules. It is important that the module is undamaged and has not been altered or modified in any way. Only 4501 modules free of dust and moisture shall be installed.

9106B1A: 1 channel HART-transparent repeater (27.5V Barrier)
9106B1B: 2 channel HART-transparent repeater (27.5V Barrier)
9106B2A: 1 channel HART-transparent repeater (25.3V Barrier)
9106B2B: 2 channel HART-transparent repeater (25.3V Barrier)

ATEX Certificate DEKRA 11ATEX0244X

Marking 9106Bxx II (1) G [Ex ia Ga] IIC/IIB/IIA
II (1) D [Ex ia Da] IIIC
I (M1) [Ex ia Ma] I

Marking 9106Axx, 9106Bxx II 3 G Ex ec nC IIC T4 Gc

Standards: EN 60079-0:2018, EN 60079-11 : 2012, EN 60079-15:2019, EN 60079-7:2015+A1:2018

Supply terminal (31,32)
Voltage: 19.2 – 31.2VDC

Status Relay. terminal (33,34)		Zone 2 installation
Voltage max:	125 VAC / 110 VDC	32 VAC / 32 VDC
Power max:	62.5 VA / 32 W	16 VA / 32 W
Current max:	0.5 A AC / 0.3 ADC	0.5 A AC / 1 ADC

Installation notes:
Install in pollution degree 2, overvoltage category II as defined in EN60664-1
Do not separate connectors when energized and an explosive gas mixture is present.
Do not mount or remove modules from the Power Rail when an explosive gas mixture is present.
Disconnect power before servicing.
The wiring of unused terminals is not allowed.
The Loop Supply and Current Input terminals for the same channel shall not be applied at the same time.

In type of protection [Ex ia Da] the parameters for intrinsic safety for gas group IIB are applicable.

For installation in Zone 2, the module shall be installed in an enclosure in type of protection Ex n or Ex e, providing a degree of protection of at least IP54. Cable entry devices and blanking elements shall fulfill the same requirements.
For installation on Power Rail in Zone 2, only Power Rail type 9400 supplied by Power Control Unit type 9410 (Type Examination Certificate KEMA 07ATEX0152 X) is allowed.

Revision date:	Version Revision	Prepared by:	Page:
2020-06-18	V6 R0	PB	1/6

9106QA01

LERBAKKEN 10, 8410 RØNDE DENMARK

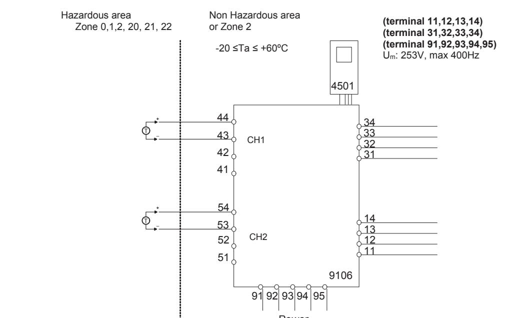

9106B1A, 9106B1B

Ex input : Loop current source
CH1 (terminal 43,44)
CH2 (terminal 53,54)
U_o: 27.5 V
I_o: 92.6 mA
P_o: 0.64 W

	IIC	IIB	IIA	I
C_o	0.084µF	0.670µF	2.23 µF	3.94 µF
L_o	4.15 mH	16.59 mH	33.17 mH	54.42 mH
L_o/R_o	--------	223 µH/Ω	447 µH/Ω	733 µH/Ω

9106B2A, 9106B2B

Ex input : Loop current source
CH1 (terminal 43,44)
CH2 (terminal 53,54)
U_o: 25.3 V
I_o: 96 mA
P_o: 0.61 W

	IIC	IIB	IIA	I
C_o	0.104µF	0.818µF	2.85 µF	4.74 µF
L_o	3.86 mH	15.43 mH	30.86 mH	50.64 mH
L_o/R_o	--------	234 µH/Ω	468 µH/Ω	769 µH/Ω

Revision date:	Version Revision	Prepared by:	Page:
2020-06-18	V6 R0	PB	2/6

9106QA01

LERBAKKEN 10, 8410 RØNDE DENMARK

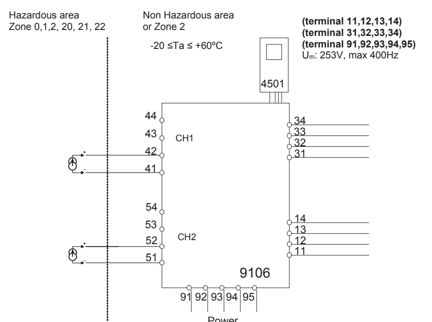

9106B1A, 9106B1B, 9106B2A, 9106B2B

Ex input : External current source
CH1 (terminal 41,42)
CH2 (terminal 51,52)
U_o: 0 V
I_o: 0 mA
P_o: 0 mW

U_i: 30 V
I_i: 120 mA
P_i: 0.85 W
C_i: 2 nF
L_i: 0 µH

Revision date:	Version Revision	Prepared by:	Page:
2020-06-18	V6 R0	PB	3/6

9106QA01

LERBAKKEN 10, 8410 RØNDE DENMARK

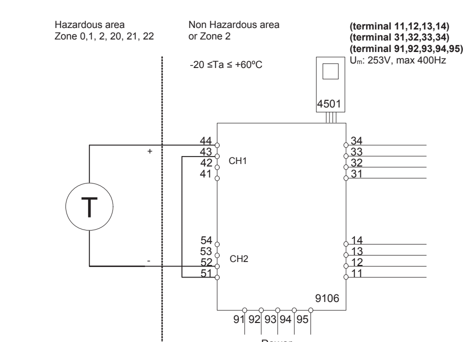

9106B1A, 9106B1B
Ex input: Loop current source 1 to 2
CH1 (terminal 44)
CH2 (terminal 52)
U_o: 27.5 V
I_o: 92.6 mA
P_o: 0.64 W

	IIC	IIB	IIA	I
C_o	0.084µF	0.670µF	2.23 µF	3.94 µF
L_o	4.15 mH	16.59 mH	33.17 mH	54.42 mH
L_o/R_o	--------	223 µH/Ω	447 µH/Ω	733 µH/Ω

9106B2A, 9106B2B
Ex input: Loop current source 1 to 2
CH1 (terminal 44)
CH2 (terminal 52)
U_o: 25.3 V
I_o: 96 mA
P_o: 0.61 W

	IIC	IIB	IIA	I
C_o	0.104µF	0.818µF	2.85 µF	4.74 µF
L_o	3.86 mH	15.43 mH	30.86 mH	50.64 mH
L_o/R_o	--------	234 µH/Ω	468 µH/Ω	769 µH/Ω

Revision date:	Version Revision	Prepared by:	Page:
2020-06-18	V6 R0	PB	4/6

9106QA01

LERBAKKEN 10, 8410 RØNDE DENMARK

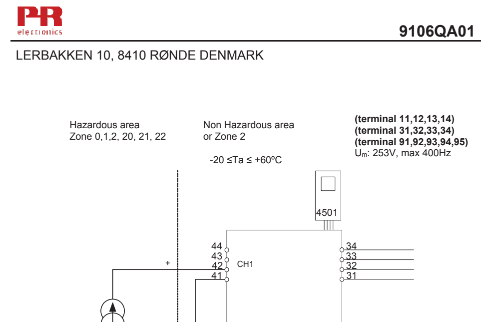

9106B1A, 9106B1B, 9106B2A, 9106B2B
Ex input : External current source 1 to 2
CH1 (terminal 42)
CH2 (terminal 51)
U_o: 0 V
I_o: 0 mA
P_o: 0 W

U_i: 30 V
I_i: 120 mA
Pi: 0.85 W
C_i: 4 nF
L_i: 0 µH

Revision date:	Version Revision	Prepared by:	Page:
2020-06-18	V6 R0	PB	5/6

9106QA01

LERBAKKEN 10, 8410 RØNDE DENMARK

9106Axx, 9106Bxx, Installation:

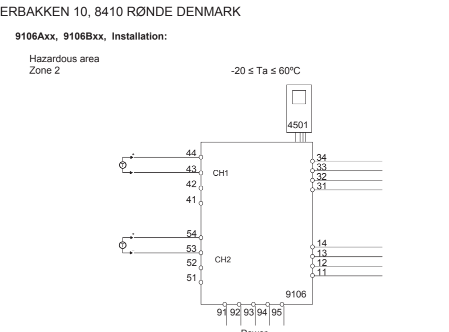

Supply: 19.2 – 31.2 VDC
(terminal 31,32)
(terminal 91,92,93,94,95)

Output:
(terminal 11,12,13,14)

Input
CH1 (terminal 43,44)
CH2 (terminal 53,54)

Status Relay. terminal (33,34)		Zone 2 Installation
Voltage max:	125 VAC / 110 VDC	32 VAC / 32 VDC
Power max:	62.5 VA / 32 W	16 VA / 32 W
Current max:	0.5 A AC / 0.3 ADC	0.5 A AC / 1 ADC

For installation in Zone 2, the module shall be installed in an enclosure in type of protection Ex n or Ex e, providing a degree of protection of at least IP54. Cable entry devices and blanking elements shall fulfill the same requirements.

For installation on Power Rail in Zone 2, only Power Rail type 9400 supplied by Power Control Unit type 9410 (Type Examination Certificate KEMA 07ATEX0152 X) is allowed.

For Installation in Zone 2 the following must be observed. The 4501 programming module is to be used solely with PR electronics modules. It is important that the module is undamaged and has not been altered or modified in any way. Only 4501 modules free of dust and moisture shall be installed.

Revision date:	Version Revision	Prepared by:	Page:
2020-06-18	V6 R0	PB	6/6

9106QI01

LERBAKKEN 10, 8410 RØNDE DENMARK

IECEx Installation drawing

For safe installation of 9106B the following must be observed. The module shall only be installed by qualified personnel who are familiar with the national and international laws, directives and standards that apply to this area.
Year of manufacture can be taken from the first two digits in the serial number.

For Installation in Zone 2 the following must be observed.
The 4501 programming module is to be used solely with PR electronics modules. It is important that the module is undamaged and has not been altered or modified in any way. Only 4501 modules free of dust and moisture shall be installed.

9106B1A: 1 channel HART□ -transparent repeater (27.5V Barrier)
9106B1B: 2 channel HART□ -transparent repeater (27.5V Barrier)
9106B2A: 1 channel HART□ -transparent repeater (25.3V Barrier)
9106B2B: 2 channel HART□ -transparent repeater (25.3V Barrier)

IECEx Certificate: .... IECEx DEK 11.0084X

Marking 9106Bxx [Ex ia Ga] IIC/IIB/IIA
[Ex ia Da] IIIC
[Ex ia Ma] I

Marking 9106Bxx, 9106Axx **Ex ec nC IIC T4 Gc**

Standards IEC60079-11:2011, IEC60079-0: 2017, IEC60079-15 :2017, IEC60079-7:2015+A1:2017

Supply terminal (31,32)
Voltage: 19.2 – 31.2VDC

Status Relay. terminal (33,34)		Zone 2 installation
Voltage max:	125 VAC / 110 VDC	32 VAC / 32 VDC
Power max:	62.5 VA / 32 W	16 VA / 32 W
Current max:	0.5 A AC / 0.3 ADC	0.5 A AC / 1 ADC

Installation notes:
Install in pollution degree 2, overvoltage category II as defined in IEC 60664-1
Do not separate connectors when energized and an explosive gas mixture is present.
Do not mount or remove modules from the Power Rail when an explosive gas mixture is present.
Disconnect power before servicing.
The wiring of unused terminals is not allowed.
The Loop Supply and Current Input terminals for the same channel shall not be applied at the same time.
In type of protection [Ex ia Da] the parameters for intrinsic safety for gas group IIB are applicable.

For installation in Zone 2, the module shall be installed in an enclosure in type of protection Ex n or Ex e, providing a degree of protection of at least IP54. Cable entry devices and blanking elements shall fulfill the same requirements.

For installation on Power Rail in Zone 2, only Power Rail type 9400 supplied by Power Control Unit type 9410 (Type Examination Certificate KEMA 07ATEX0152 X) is allowed.

Revision date:	Version Revision	Prepared by:	Page:
2020-06-18	V6 R0	PB	1/6

9106QI01

LERBAKKEN 10, 8410 RØNDE DENMARK

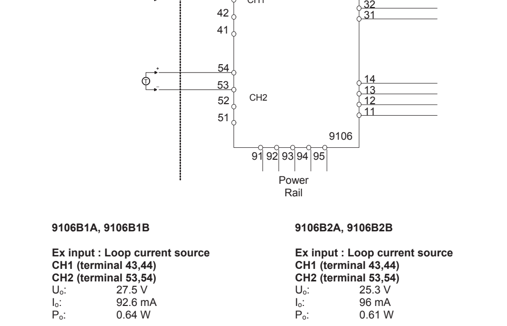

9106B1A, 9106B1B

Ex input : Loop current source
CH1 (terminal 43,44)
CH2 (terminal 53,54)
U_o: 27.5 V
I_o: 92.6 mA
P_o: 0.64 W

	IIC	IIB	IIA	I
C_o	0.084µF	0.670µF	2.23 µF	3.94 µF
L_o	4.15 mH	16.59 mH	33.17 mH	54.42 mH
L_o/R_o	--------	223 µH/Ω	447 µH/Ω	733 µH/Ω

9106B2A, 9106B2B

Ex input : Loop current source
CH1 (terminal 43,44)
CH2 (terminal 53,54)
U_o: 25.3 V
I_o: 96 mA
P_o: 0.61 W

	IIC	IIB	IIA	I
C_o	0.104µF	0.818µF	2.85 µF	4.74 µF
L_o	3.86 mH	15.43 mH	30.86 mH	50.64 mH
L_o/R_o	--------	234 µH/Ω	468 µH/Ω	769 µH/Ω

Revision date:	Version Revision	Prepared by:	Page:
2020-06-18	V6 R0	PB	2/6

9106QI01

LERBAKKEN 10, 8410 RØNDE DENMARK

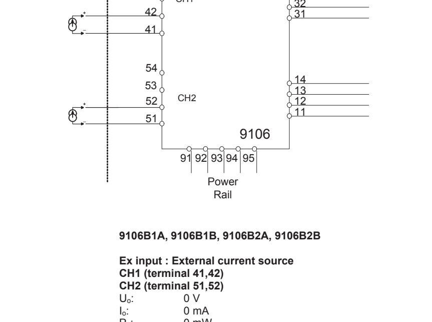

9106B1A, 9106B1B, 9106B2A, 9106B2B

Ex input : External current source
CH1 (terminal 41,42)
CH2 (terminal 51,52)
U_o: 0 V
I_o: 0 mA
P_o: 0 mW

U_i: 30 V
I_i: 120 mA
P_i: 0.85 W
C_i: 2 nF
L_i: 0 µH

Revision date:	Version Revision	Prepared by:	Page:
2020-06-18	V6 R0	PB	3/6

9106QI01

LERBAKKEN 10, 8410 RØNDE DENMARK

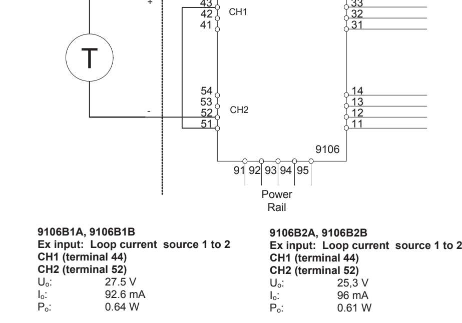

9106B1A, 9106B1B
Ex input: Loop current source 1 to 2
CH1 (terminal 44)
CH2 (terminal 52)
U_o: 27.5 V
I_o: 92.6 mA
P_o: 0.64 W

	IIC	IIB	IIA	I
C_o	0.084µF	0.670µF	2.23 µF	3.94 µF
L_o	4.15 mH	16.59 mH	33.17 mH	54.42 mH
L_o/R_o	--------	223 µH/Ω	447 µH/Ω	733 µH/Ω

9106B2A, 9106B2B
Ex input: Loop current source 1 to 2
CH1 (terminal 44)
CH2 (terminal 52)
U_o: 25,3 V
I_o: 96 mA
P_o: 0.61 W

	IIC	IIB	IIA	I
C_o	0.104µF	0.818µF	2.85 µF	4.74 µF
L_o	3.86 mH	15.43 mH	30.86 mH	50.64 mH
L_o/R_o	--------	234 µH/Ω	468 µH/Ω	769 µH/Ω

Revision date:	Version Revision	Prepared by:	Page:
2020-06-18	V6 R0	PB	4/6

9106QI01

LERBAKKEN 10, 8410 RØNDE DENMARK

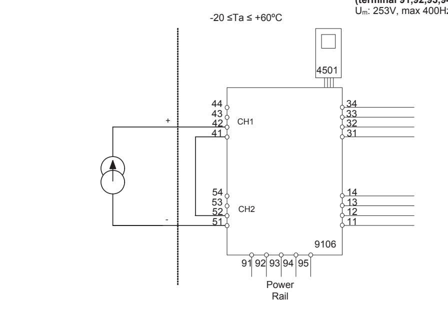

9106B1A, 9106B1B, 9106B2A, 9106B2B
Ex input : External current source 1 to 2
CH1 (terminal 42)
CH2 (terminal 51)
U_o: 0 V
I_o: 0 mA
P_o: 0 W

U_i: 30 V
I_i: 120 mA
Pi: 0.85 W
C_i: 4 nF
L_i: 0 µH

Revision date:	Version Revision	Prepared by:	Page:
2020-06-18	V6 R0	PB	5/6

9106QI01

LERBAKKEN 10, 8410 RØNDE DENMARK

9106Axx, 9106Bxx, Installation:

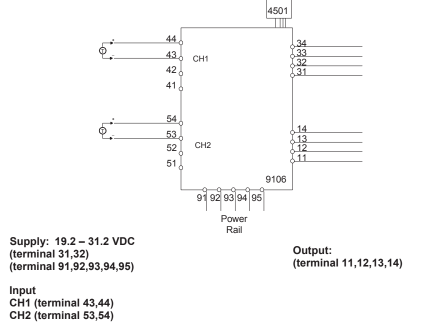

Supply: 19.2 – 31.2 VDC
(terminal 31,32)
(terminal 91,92,93,94,95)

Output:
(terminal 11,12,13,14)

Input
CH1 (terminal 43,44)
CH2 (terminal 53,54)

Status Relay. terminal (33,34)		Zone 2 Installation
Voltage max:	125VAC / 110VDC	32VAC / 32VDC
Power max:	62,5VA / 32W	16VA / 32W
Current max:	0.5A AC / 0.3ADC	0.5A AC / 1ADC

For installation in Zone 2, the module shall be installed in an enclosure in type of protection Ex n or Ex e, providing a degree of protection of at least IP54. Cable entry devices and blanking elements shall fulfill the same requirements.

For installation on Power Rail in Zone 2, only Power Rail type 9400 supplied by Power Control Unit type 9410 (Certificate IECEx KEM 08.0025X) is allowed.

For Installation in Zone 2 the following must be observed. The 4501 programming module is to be used solely with PRelectronics modules. It is important that the module is undamaged and has not been altered or modified in any way. Only 4501 modules free of dust and moisture shall be installed.

Revision date:	Version Revision	Prepared by:	Page:
2020-06-18	V6 R0	PB	6/6

FM Installation drawing

For safe installation of 9106B the following must be observed. The module shall only be installed by qualified personnel who are familiar with the national and international laws, directives and standards that apply to this area.
Year of manufacture can be taken from the first two digits in the serial number.

For Installation in Div2/Zone2 the following must be observed.
The 4501 programming module is to be used solely with PR electronics modules. It is important that the module is undamaged and has not been altered or modified in any way. Only 4501 modules free of dust and moisture shall be installed.

9106Bab. HART Transparent Repeater
a: Barrier (1 = 27.5V barrier; 2 = 25.3V barrier)
b: Channels (A = Single; B = Double)

Supply terminal (31,32)
Voltage: 19.2 – 31.2VDC

Status Relay. terminal (33,34)		**Zone 2 installation**
Voltage max:	125 VAC / 110 VDC	32 VAC / 32 VDC
Power max:	62.5 VA / 32 W	16 VA / 32 W
Current max:	0.5 A AC / 0.3 ADC	0.5 A AC / 1 ADC

Installation notes:

In Class I, Division 2 installations, the subject equipment shall be mounted within a too-secured enclosure which is capable of accepting one or more of the Class I, Division 2 wiring methods specified in the National Electrical Code (ANSI/NFPA 70), or Canadian Electrical Code (C22.1).

In Class I, Zone 2 installations, the subject equipment shall be mounted within a tool secured enclosure which is capable of accepting one or more of the Class I, Zone 2 wiring methods specified in the National Electrical Code (ANSI/NFPA 70)or or Canadian Electrical Code (C22.1). Where installed in outdoor or potentially wet locations, the enclosure shall, at a minimum, meet the requirements of IP54.

Install in environments rated Pollution Degree 2 or better; overvoltage category I or II.

The equipment shall be installed in an enclosure with a minimum ingress protection rating of IP54 unless the apparatus is intended to be afforded an equivalent degree of protection by location.

The module is galvanically isolated and does not require grounding.

Use 60 / 75 °C copper conductors with wire size AWG: (26-14)

Warning: Substitution of components may impair intrinsic safety.
Warning: To prevent ignition of the explosive atmospheres, disconnect power before servicing and do not separate connectors, install or remove module from Power Rail when energized and an explosive gas mixture is present.

Warning: The Loop Supply and Current Input terminals for the same channel shall not be applied at the same time. The wiring of unused terminals is not allowed.

Hazardous Classified Location
Class I/II/III, Division 1, Group A,B,C,D,E,F,G or Class I, Zone 0/1 Group IIC, [AEx ia] IIC or Group IIC, [Ex ia Ga] IIC Gc

Unclassified Location or Hazardous Classified Location
Class I, Division 2, Group A,B,C,D T4 or Class I Zone 2 Group IIC T4 Gc

Simple Apparatus or Intrinsic safe apparatus with entity parameters:

Vmax (Ui) ≥ Vt (Uo)
Imax (Ii) ≥ It (Io)
Pi ≥ Pt (Po)
Ca ≥ Ccable + Ci
La ≥ Lcable + Li

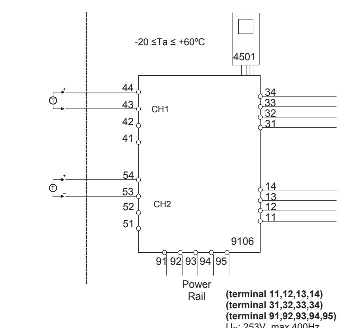

(terminal 11,12,13,14)
(terminal 31,32,33,34)
(terminal 91,92,93,94,95)
U_m: 253V, max 400Hz

9106B1A, 9106B1B

Ex input : Loop current source
CH1 (terminal 43,44)
CH2 (terminal 53,54)
U_o: 27.5 V
I_o: 92.6 mA
P_o: 0.64 W

	IIC or A,B	IIB or C,E,F	IIA or D,G
C_o	0.084µF	0.670µF	2.24 µF
L_o	4.14 mH	16.58 mH	33.17 mH
L_o/R_o	--------	223 µH/Ω	447 µH/Ω

9106B2A, 9106B2B

Ex input : Loop current source
CH1 (terminal 43,44)
CH2 (terminal 53,54)
U_o: 25.3 V
I_o: 96 mA
P_o: 0.61 W

	IIC or A,B	IIB or C,E,F	IIA or D,G
C_o	0.104µF	0.818µF	2.85 µF
L_o	3.85 mH	15.43 mH	30.86 mH
L_o/R_o	---------	234 µH/Ω	468 µH/Ω

Hazardous Classified Location
Class I/II/III, Division 1, Group A,B,C,D,E,F,G or Class I, Zone 0/1 Group IIC, [AEx ia] IIC or Group IIC, [Ex ia Ga] IIC Gc

Unclassified Location or Hazardous Classified Location
Class I, Division 2, Group A,B,C,D T4 or Class I Zone 2 Group IIC T4 Gc

Simple Apparatus or Intrinsic safe apparatus with entity parameters:

Vmax (Ui) ≥ Vt (Uo)
Imax (Ii) ≥ It (Io)
Pi ≥ Pt (Po)
Ca ≥ Ccable + Ci
La ≥ Lcable + Li

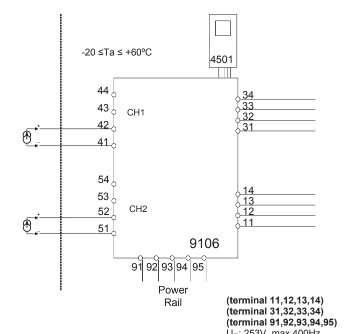

(terminal 11,12,13,14)
(terminal 31,32,33,34)
(terminal 91,92,93,94,95)
U_m: 253V, max 400Hz

9106B1A, 9106B1B, 9106B2A, 9106B2B

Ex input : External current source
CH1 (terminal 41,42)
CH2 (terminal 51,52)
U_o: 0 V
I_o: 0 mA
P_o: 0 mW

U_i: 30 V
I_i: 120 mA
P_i: 0.85 W
C_i: 2 nF
L_i: 0 µH

Hazardous Classified Location
Class I/II/III, Division 1, Group A,B,C,D,E,F,G or Class I, Zone 0/1 Group IIC, [AEx ia] IIC or Group IIC, [Ex ia Ga] IIC Gc

Unclassified Location or Hazardous Classified Location
Class I, Division 2, Group A,B,C,D T4 or Class I Zone 2 Group IIC T4 Gc

Simple Apparatus or Intrinsic safe apparatus with entity parameters:

Vmax (Ui) ≥ Vt (Uo)
Imax (Ii) ≥ It (Io)
Pi ≥ Pt (Po)
Ca ≥ Ccable + Ci
La ≥ Lcable + Li

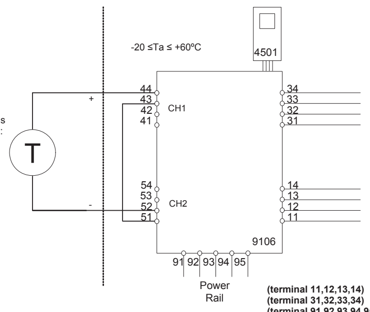

(terminal 11,12,13,14)
(terminal 31,32,33,34)
(terminal 91,92,93,94,95)
U_m: 253V, max 400Hz

9106B1A, 9106B1B
Ex input: Loop current source 1 to 2
CH1 (terminal 44)
CH2 (terminal 52)
U_o: 27.5 V
I_o: 92.6 mA
P_o: 0.64 W

	IIC or A,B	IIB or C,E,F	IIA or D,G
C_o	0.084µF	0.670µF	2.23 µF
L_o	4.14 mH	16.58 mH	33.17 mH
L_o/R_o	--------	223 µH/Ω	447 µH/Ω

9106B2A, 9106B2B
Ex input: Loop current source 1 to 2
CH1 (terminal 44)
CH2 (terminal 52)
U_o: 25,3 V
I_o: 96 mA
P_o: 0.61 W

	IIC or A,B	IIB or C,E,F	IIA or D,G
C_o	0.104µF	0.818µF	2.85 µF
L_o	3.85 mH	15.43 mH	30.86 mH
L_o/R_o	---------	234 µH/Ω	468 µH/Ω

Hazardous Classified Location
Class I/II/III, Division 1, Group A,B,C,D,E,F,G or Class I, Zone 0/1 Group IIC, [AEx ia] IIC or Group IIC, [Ex ia Ga] IIC Gc

Unclassified Location or Hazardous Classified Location
Class I, Division 2, Group A,B,C,D T4 or Class I Zone 2 Group IIC T4 Gc

Simple Apparatus or Intrinsic safe apparatus with entity parameters:

Vmax (Ui) ≥ Vt (Uo)
Imax (Ii) ≥ It (Io)
Pi ≥ Pt (Po)
Ca ≥ Ccable + Ci
La ≥ Lcable + Li

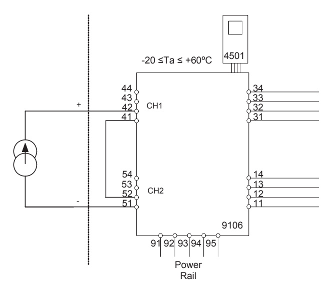

9106B1A, 9106B1B, 9106B2A, 9106B2B
Ex input : External current source 1 to 2
CH1 (terminal 42)
CH2 (terminal 51)
U_o: 0 V
I_o: 0 mA
P_o: 0 W

(terminal 11,12,13,14)
(terminal 31,32,33,34)
(terminal 91,92,93,94,95)
U_m: 253V, max 400Hz

U_i: 30 V
I_i: 120 mA
Pi: 0.85 W
C_i: 4 nF
L_i: 0 µH

UL Installation drawing

For safe installation of the **Process Control Equipment (Associated Apparatus)** 9106 the following must be observed. The module shall only be installed by qualified personnel who are familiar with the national and international laws, directives and standards that apply to this area.

For Installation in Div2/Zone2 the following must be observed.
The 4501 programming module is to be used solely with PR electronics modules. It is important that the module is undamaged and has not been altered or modified in any way. Only 4501 modules free of dust and moisture shall be installed.

9106A1A-U9 and 9106B1A-U9 :1 channel HART□ -transparent repeater (27.5V Barrier)
9106A1B-U9 and 9106B1B-U9 :2 channel HART□ -transparent repeater (27.5V Barrier)
9106A2A-U9 and 9106B2A-U9 :1 channel HART□ -transparent repeater (25.3V Barrier)
9106A2B-U9 and 9106B2B-U9 :2 channel HART□ -transparent repeater (25.3V Barrier)

Marking:

c UL us LISTED
Proc. Cont. Eq. for Use in Haz. Loc.
Install in CL I DIV2 GP A-D T4 provide IS circuits to CL I-III DIV 1 GP A-G or CL I Zn2 Gp IIC T4 provides IS
E233311 circuits for CL I Zn0 Gp IIC/Zn20 Gp IIIC
Um=253V [Exia] Installation Drawing: 9106QU01

The 9106Bxx is a galvanically isolating associated apparatus intended for installation in non-hazardous locations or Class I, Division 2, Groups A – D hazardous locations with intrinsically safe connections to Class I, II and III hazardous locations.

c UL us LISTED
Proc. Cont. Eq. for Use in Haz. Loc.
Install in CL I DIV2 GP A-D T4
or CL I Zn2 Gp IIC T4
E233311 Installation Drawing: 9106QU01

The 9106Axx equipment is intended for installation in non-hazardous locations or Class I,Division 2, Groups A – D or Zone 2 Croup IIC hazardous locations.

Standards:

- UL 121201 NONINCENDIVE ELECTRICAL EQUIPMENT FOR USE IN CLASS I AND II, DIVISION 2 AND CLASS III, DIVISIONS 1 AND 2 HAZARDOUS (CLASSIFIED) LOCATIONS Edition 9 - Revision Date 2018/08/31
- CSA C22.2 NO. 213 NONINCENDIVE ELECTRICAL EQUIPMENT FOR USE IN CLASS I AND II, DIVISION 2 AND CLASS III, DIVISIONS 1 AND 2 HAZARDOUS (CLASSIFIED) LOCATIONS- Edition 3 - Issue Date 2017/09/01
- UL 913 STANDARD FOR INTRINSICALLY SAFE APPARATUS AND ASSOCIATED APPARATUS FOR USE IN CLASS I, II, III, DIVISION 1, HAZARDOUS (CLASSIFIED) LOCATIONS- Edition 8 - Revision Date 2015/10/16
- CSA C22.2 NO. 60079-0 EXPLOSIVE ATMOSPHERES — PART 0: EQUIPMENT — GENERAL REQUIREMENTS- Edition 3 - Issue Date 2015/10/01
- CSA C22.2 NO. 60079-11:14 EXPLOSIVE ATMOSPHERES — PART 11: EQUIPMENT PROTECTION BY INTRINSIC SAFETY "I"- Edition 2 - Issue Date 2014/02/01

Installation notes 9106Axx and 9106Bxx:

The module must be installed in an tool-secured enclosure suitable for the application in accordance with the National Electrical Code (ANSI/NFPA 70) for installation in the United States, the Canadian Electrical Code for installations in Canada, or other local codes, as applicable.

The module is galvanically isolated and does not require grounding.

Terminal 41, 42, 43, 44 are internally connected to CH1.
Terminal 51, 52, 53, 54 are internally connected to CH2.

Install in pollution degree 2, overvoltage category II in accordance with IEC 60664-1.

Use minimum 75 ºC copper conductors with wire size AWG: (26-14)

Warning: Substitution of components may impair intrinsic safety.
Avertissement : La substitution des composants peut nuire à la sécurité intrinsèque'.

There are no serviceable parts in the equipment and no component substitution is permitted

Warning: To prevent ignition of the explosive atmospheres, disconnect power before servicing and do not separate connectors, install or remove module from Power Rail when energized and an explosive gas mixture is present.

Avertissement : Pour éviter l'inflammation d'atmosphères explosibles, déconnectez l'alimentation avant les opérations d'entretien. Ne montez pas ou n'enlevez pas les connecteurs quand le module est sous tension et en présence d'un mélange de gaz. Ne montez pas ou n'enlevez pas les modules du rail d'alimentation en présence d'un mélange de gaz.

Warning: The Loop Supply and Current Input terminals for the same channel shall not be applied at the same time. The wiring of unused terminals is not allowed.

Avertissement : Les bornes d'entrée pour l'alimentation de boucle et l'entrée courant pour la même voie ne doivent pas être utilisées en même temps. Le câblage des bornes inutilisées n'est pas permis.

Installation notes 9106Bxx:

Associated Equipment /Appareillage Associé [Ex ia]

The output current of this associated apparatus is limited by a resistor such that the output voltage-current plot is a straight line drawn between open-circuit voltage and short-circuit current.

Selected intrinsically safe equipment must be third party listed as intrinsically safe for the application, and have intrinsically safe entity parameters conforming with Table 1 below.

TABLE 1:

I.S. Equipment		Associated Apparatus
V max (or Ui)	≥	Voc or Vt (or Uo)
I max (or Ii)	≥	Isc or It (or Io)
P max, Pi	≥	Po
Ci + Ccable	≤	Ca (or Co)
Li + Lcable	≤	La (or Lo)

The 9106B may also be connected to a simple apparatus as defined in Article 504.2 and installed and temperature classified in accordance with Article 504.10(D) of the National Electrical Code (ANSI/NFPA 70), or other local codes, as applicable.

Capacitance and inductance of the field wiring from the intrinsically safe equipment to the associated apparatus shall be calculated and must be included in the system calculations as shown in Table 1. Cable capacitance, Ccable, plus intrinsically safe equipment capacitance, Ci must be less than the marked capacitance, Ca (or Co), shown on any associated apparatus used. The same applies for inductance (Lcable, Li and La or Lo, respectively). Where the cable capacitance and inductance per foot are not known, the following values shall be used: Ccable = 60 pF/ft., Lcable = 0.2 µH/ft.

Where multiple circuits extend from the same piece of associated apparatus, they must be installed in separate cables or in one cable having suitable insulation. Refer to Article 504.30(B) of the National Electrical Code (ANSI/NFPA 70) and Instrument Society of America Recommended Practice ISA RP12.06 for installing intrinsically safe equipment.

Intrinsically safe circuits must be wired and separated in accordance with Article 504.20 of the National Electrical Code (ANSI/NFPA 70) or other local codes, as applicable.

The 9106B has not been evaluated for use in combination with another associated apparatus.

For installations in which both the Ci and Li of the intrinsically safe apparatus exceeds 1% of the Ca (or Co) and La (or Lo) parameters of the associated apparatus (excluding the cable), then 50% of Ca (or Co) and La (or Lo) parameters are applicable and shall not be exceeded. The reduced capacitance shall not be greater than 1 µF for Groups C and/or D, and 600 nF for Groups A and B. The values of Ca (or Co) and La (or Lo) determined by this method shall not be exceeded by the sum of all of Ci plus cable capacitances and the sum of all of the Li plus cable inductances in the circuit respectively.

General:

Supply terminal (31,32)
Voltage: 19.2 – 31.2VDC

Status Relay. terminal (33,34)		**Class I Division 2 or Zone 2 installation**
Voltage max.	125 Vac / 110 Vdc	32 Vac / 32 Vdc
Current max.	0.5 Aac / 0.3 Adc	0.5 Aac / 0.3 Adc

Hazardous Classified Location
Class I/II/III, Division 1, Group A,B,C,D,E,F,G
Zone 0,1, 2 Group IIC, IIB, IIA or
Zone 20, 21

Unclassified Location or Hazardous Classified Location
Class I, Division 2, Group ABCD T4
Class I Zone 2 Group IIC T4

Simple Apparatus or Intrinsic safe apparatus with entity parameters:

Vmax (Ui) ≥ Vt (Uo)
Imax (Ii) ≥ It (Io)
Pi ≥ Pt (Po)
Ca ≥ Ccable + Ci
La ≥ Lcable + Li

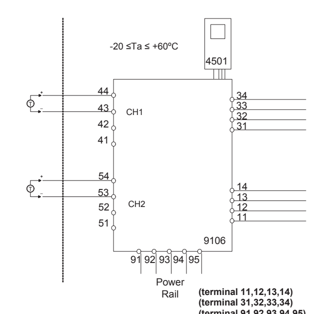

(terminal 11,12,13,14)
(terminal 31,32,33,34)
(terminal 91,92,93,94,95)
U_m: 253V, max 400Hz

9106B1A, 9106B1B

Ex input : Loop current source
CH1 (terminal 43,44)
CH2 (terminal 53,54)
Voc or U_o: 27.5 Vdc
Isc or I_o: 92.6 mA
P_o: 0.64 W

	IICor A,B	IIB or C,E,F	IIA or D, G
Ca or C_o	0.084µF	0.670µF	2.23 µF
La or L_o	4.15 mH	16.59 mH	33.17 mH
L_o/R_o	--------	223 µH/Ω	447 µH/Ω

9106B2A, 9106B2B

Ex input : Loop current source
CH1 (terminal 43,44)
CH2 (terminal 53,54)
Voc or U_o: 25.3 V
Isc or I_o: 96 mA
P_o: 0.61 W

	IIC or A,B	IIB or C,E,F	IIA or D, G
Ca or C_o	0.104µF	0.818µF	2.85 µF
La or L_o	3.86 mH	15.43 mH	30.86 mH
L_o/R_o	---------	234 µH/Ω	468 µH/Ω

Hazardous Classified Location
Class I/II/III, Division 1, Group A,B,C,D,E,F,G
Zone 0,1, 2 Group IIC, IIB, IIA or
Zone 20, 21

Unclassified Location or Hazardous Classified Location
Class I, Division 2, Group ABCD T4
Class I Zone 2 Group IIC T4

Simple Apparatus or Intrinsic safe apparatus with entity parameters:

Vmax (Ui) ≥ Vt (Uo)
Imax (Ii) ≥ It (Io)
Pi ≥ Pt (Po)
Ca ≥ Ccable + Ci
La ≥ Lcable + Li

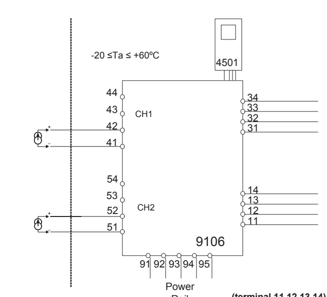

(terminal 11,12,13,14)
(terminal 31,32,33,34)
(terminal 91,92,93,94,95)
U_m: 253V, max 400Hz

9106B1A, 9106B1B, 9106B2A, 9106B2B

Ex input : External current source
CH1 (terminal 41,42)
CH2 (terminal 51,52)
Voc or U_o: 0 V
Isc or I_o: 0 mA
P_o: 0 mW

Vmax or U_i: 30 V
Imax or I_i: 120 mA
Pmax or P_i: 0.85 W
C_i: 2 nF
L_i: 0 µH

Hazardous Classified Location
Class I/II/III, Division 1, Group A,B,C,D,E,F,G
Zone 0,1, 2 Group IIC, IIB, IIA or
Zone 20, 21

Unclassified Location or Hazardous Classified Location
Class I, Division 2, Group ABCD T4
Class I Zone 2 Group IIC T4

Simple Apparatus or Intrinsic safe apparatus with entity parameters:

Vmax (Ui) ≥ Vt (Uo)
Imax (Ii) ≥ It (Io)
Pi ≥ Pt (Po)
Ca ≥ Ccable + Ci
La ≥ Lcable + Li

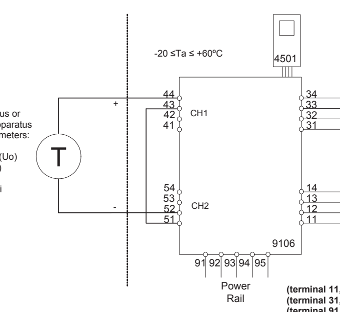

(terminal 11,12,13,14)
(terminal 31,32,33,34)
(terminal 91,92,93,94,95)
U_m: 253V, max 400Hz

9106B1A, 9106B1B
Ex input: Loop current source 1 to 2
CH1 (terminal 44)
CH2 (terminal 52)
Voc or U_o: 27.5 V
Isc or I_o: 92.6 mA
P_o: 0.64 W

	IIC or A,B	IIB or C,E,F	IIA or D,G
Ca or C_o	0.084µF	0.670µF	2.23 µF
La or L_o	4.15 mH	16.59 mH	33.17 mH
L_o/R_o	--------	223 µH/Ω	447 µH/Ω

9106B2A, 9106B2B
Ex input: Loop current source 1 to 2
CH1 (terminal 44)
CH2 (terminal 52)
Voc or U_o: 25,3 V
Isc or I_o: 96 mA
P_o: 0.61 W

	IIC or A,B	IIB or C,E,F	IIA or D,G
Ca or C_o	0.104µF	0.818µF	2.85 µF
La or L_o	3.86 mH	15.43 mH	30.86 mH
L_o/R_o	---------	234 µH/Ω	468 µH/Ω

Hazardous Classified Location
Class I/II/III, Division 1, Group A,B,C,D,E,F,G
Zone 0,1, 2 Group IIC, IIB, IIA or
Zone 20, 21

Unclassified Location or Hazardous Classified Location
Class I, Division 2, Group ABCD T4
Class I Zone 2 Group IIC T4

Simple Apparatus or Intrinsic safe apparatus with entity parameters:

Vmax (Ui) ≥ Vt (Uo)
Imax (Ii) ≥ It (Io)
Pi ≥ Pt (Po)
Ca ≥ Ccable + Ci
La ≥ Lcable + Li

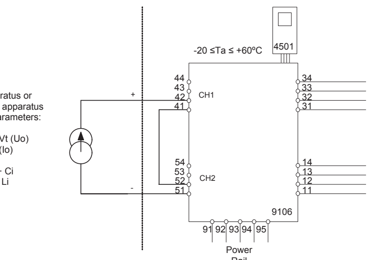

9106B1A, 9106B1B, 9106B2A, 9106B2B
Ex input : External current source 1 to 2
CH1 (terminal 42)
CH2 (terminal 51)
Voc or U_o: 0 V
Isc or I_o: 0 mA
P_o: 0 W

(terminal 11,12,13,14)
(terminal 31,32,33,34)
(terminal 91,92,93,94,95)
U_m: 253V, max 400Hz

Vmax or U_i: 30 V
Imax or I_i: 120 mA
Pmax or Pi: 0.85 W
C_i: 4 nF
L_i: 0 µH

9106Axx Installation:

Unclassified Location or Hazardous Classified Location
Class I, Division 2 Group A,B,C,D T4
Class I, Zone 2, Group IIC, IIB, IIA T4

Supply terminal (31,32)
Voltage: 19.2 – 31.2 VDC

Status relay, terminal (33,34)
Class I Division 2 or Zone 2 installation:
Voltage max: 32 Vac/ 32 Vdc
Current max: 0.5 Aac / 0.3 Adc

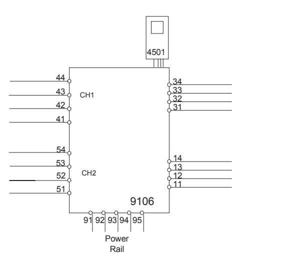

INMETRO - Desenhos para Instalação

Para instalação segura do 9106B o manual seguinte deve ser observado. O módulo deve ser instalado somente por profissionais qualificados que estão familiarizados com as leis nacionais e internacionais, diretrizes e normas que se aplicam a esta área.
Ano de fabricação pode ser obtido a partir dos dois primeiros dígitos do número de série.

Para a instalação na Zona 2 o seguinte deve ser observado.
O módulo de programação de 4501, deve ser utilizado apenas com os módulos PR electronics. É importante que o módulo esteja intacto e não tenha sido alterado ou modificado de qualquer maneira. Apenas os módulos 4501 livres de poeira e umidade devem ser instalados.

9106B1A:1 canal HART® -repetidor transparente (Barreira 27.5 V)
9106B1B:2 canais HART® - repetidor transparente (Barreira 27.5 V)
9106B2A:1 canal HART® - repetidor transparente (Barreira 25.3 V)
9106B2B:2 canais HART® - repetidor transparente (Barreira 25.3 V)

INMETRO Certificado ………… DEKRA 16.0001X

Marcas
[Ex ia Ga] IIC/IIB/IIA
Ex nA nC IIC T4 Gc
[Ex ia Da] IIIC
[Ex ia Ma] I

Normas: **ABNT NBR IEC 60079-0:2013, ABNT NBR IEC 60079-11:2013, ABNT NBR IEC 60079-15:2012.**

Terminais de alimentação (31,32)
Voltagem: 19.2 – 31.2VDC

Relé de estado terminais (33,34)		Instalação Zone 2
Voltagem máx.:	125 VAC / 110 VDC	32 VAC / 32 VDC
Potência máx.:	62.5 VA / 32 W	16 VA / 32 W
Corrente máx.:	0.5 A AC / 0.3 ADC	0.5 A AC / 1 ADC

Notas de Instalação:

Instalação em grau de poluição 2, categoria de sobretensão II conforme definido no IEC 60664-1
Os circuitos não intrinsecamente seguros só pode ser connectado para sobretensão limitado ao categoria I/II como definido na IEC 60664-1.
Não separe conectores quando energizado ou quando uma mistura de gás explosivo estiver presente.
Não monte ou remova módulos do trilho de alimentação quando uma mistura explosiva de gás estiver presente.
Desligue a alimentação antes da manutenção.
A fiação de terminais sem uso não é permitida.
A fonte de Loop e terminais de entrada de corrente para o mesmo canal não deve ser aplicada ao mesmo tempo.
Em tipo de proteção [Ex ia Da] os parâmetros para a segurança intrínseca para grupo de gás IIB são aplicáveis.
Para a instalação em Zona 2, o módulo deve ser instalado em um invólucro conformidade com o tipo de proteção 'Ex n' ou 'Ex e', fornecendo no mínimo grau de proteçao IP54.
Dispositivos de entrada de cabo e elementos de vedação devem cumprir com os mesmos requisitos.

Para a instalação de trilho de energia na Zona 2, apenas o trilho de alimentação Rail 9400 fornecido pela Unidade de Controle de Potência 9410 é permitido.

Área de Risco
Zona 0,1,2, 20, 21, 22

Área de não Risco
ou Zona 2

(terminais **11,12,13,14)**
(terminais **31,32,33,34)**
(terminais **91,92,93,94,95)**
U_m: 253V, max 400Hz

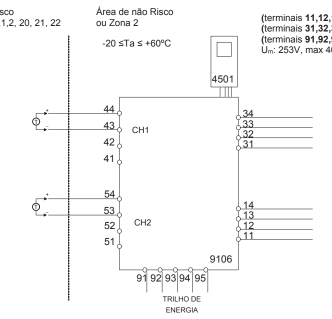

9106B1A, 9106B1B

entrada Ex: Fonte de corrente da Malha
CN1 (terminais 43,44)
CN2 (terminais 53,54)
U_o: 27.5 V
I_o: 92.6 mA
P_o: 0.65 W

	IIC	IIB	IIA	I
C_o	0.084µF	0.670µF	2.23 µF	3.94 µF
L_o	4.15 mH	16.59 mH	33.17 mH	54.42 mH
L_o/R_o	--------	223 µH/Ω	447 µH/Ω	733 µH/Ω

9106B2A, 9106B2B

entrada EX: Fonte de corrente da Malha
CN1 (terminais 43,44)
CN2 (terminais 53,54)
U_o: 25.3 V
I_o: 96 mA
P_o: 0.61 W

	IIC	IIB	IIA	I
C_o	0.104µF	0.818µF	2.85 µF	4.74 µF
L_o	3.86 mH	15.43 mH	30.86 mH	50.64 mH
L_o/R_o	---------	234 µH/Ω	468 µH/Ω	769 µH/Ω

Área de Risco
Zona 0,1,2, 20, 21, 22

Área de não Risco
ou Zona 2

(terminais 11,12,13,14)
(terminais 31,32,33,34)
(terminais 91,92,93,94,95)
U_m: 253 V, max 400 Hz

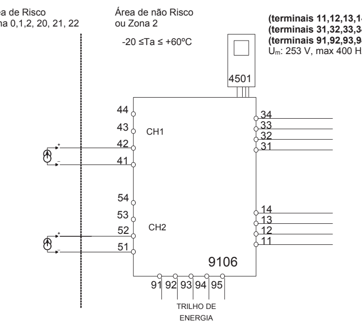

9106B1A, 9106B1B, 9106B2A, 9106B2B

entrada EX: Fonte de corrente externa
CN1 (terminal 41,42)
CN2 (terminal 51,52)
U_o: 0 V
I_o: 0 mA
P_o: 0 mW

U_i: 30 V
I_i: 120 mA
P_i: 0.85 W
C_i: 2 nF
L_i: 0 µH

Área de Risco
Zona 0,1, 2, 20, 21, 22

Área de não Risco
ou Zona 2

(terminais 11,12,13,14)
(terminais 31,32,33,34)
(terminais 91,92,93,94,95)
U_m: 253 V, máx. 400 Hz

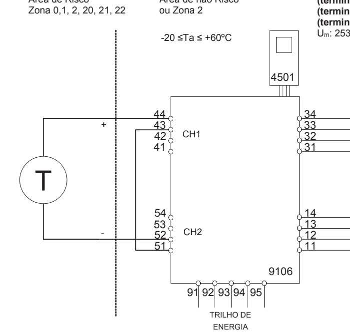

9106B1A, 9106B1B
entrada EX: fonte de corrente da malha 1 e 2
CN1 (terminal 44)
CN2 (terminal 52)
U_o: 27.5 V
I_o: 92.6 mA
P_o: 0.64 W

	IIC	IIB	IIA	I
C_o	0.084µF	0.670µF	2.23 µF	3.94 µF
L_o	4.15 mH	16.59 mH	33.17 mH	54.42 mH
L_o/R_o	--------	223 µH/Ω	447 µH/Ω	733 µH/Ω

9106B2A, 9106B2B
entrada EX: fonte de corrente da malha 1 e 2
CN1 (terminal 44)
CN2 (terminal 52)
U_o: 25,3 V
I_o: 96 mA
P_o: 0.61 W

	IIC	IIB	IIA	I
C_o	0.104µF	0.818µF	2.85 µF	4.74 µF
L_o	3.86 mH	15.43 mH	30.86 mH	50.64 mH
L_o/R_o	---------	234 µH/Ω	468 µH/Ω	769 µH/Ω

EU DECLARATION OF CONFORMITY

(9106DoC_103)

As manufacturer
PR electronics A/S, Lerbakken 10, DK-8410 Rønde
hereby declares that the following products:
Type: **9106**
Name: **HART transparent repeater**
From serial no.: **201032001**
is in conformity with the following directives and standards:

The EMC Directive 2014/30/EU and later amendments
EN 61326-1 : 2013
Immunity test requirements for equipment intended to be used in an industrial electromagnetic environment. For specification of the acceptable EMC performance level, refer to the electrical specifications for the device.

The Low Voltage Directive 2014/35/EU and later amendments
EN 61010-1 : 2010

The ATEX Directive 2014/34/EU and later amendments
EN IEC 60079-0 : 2018, EN 60079-11 : 2012, EN 60079-15 : 2019
and EN 60079-7 : 2015 + A1 : 2018
ATEX certificate: DEKRA 11ATEX0244 X
ATEX notified body (type approval)
DEKRA Certification B.V.
Meander 1051, 6825 MJ Arnhem
P.O. Box 5185, 6802 ED Arnhem
The Netherlands

The RoHS2 Directive 2011/65/EU and later amendments
EN 50581 : 2012

Notified body 0344
DEKRA Certification B.V.
Meander 1051, 6825 MJ Arnhem
P.O. Box 5185, 6802 ED Arnhem
The Netherlands

Rønde, 18 June 2020

Stig Lindemann, CTO
Manufacturer's signature

DK Kina RoHS | UK China RoHS | FR RoHS chinois | DE China-RoHS

Part Name	Hazardous Substances					
	Lead (Pb)	Mercury (Hg)	Cadmium (Cd)	Hexavalent Chromium (Cr (VI))	Polybrominated biphenyls (PBB)	Polybrominated diphenyl ethers (PBDE)
Printed circuit board	X	O	O	O	O	O

This table is prepared in accordance with the provisions of SJ/T 11364
O: Indicates that said hazardous substance contained in all of the homogeneous materials for this part is below the limit requirement of GB/T 26572.
X: Indicates that said hazardous substance contained in at least one of the homogeneous materials used for this part is above the limit requirement of GB/T 26572.

The product's Environmentally Friendly Use Period (EFUP) is 50 years

DK Dokumentation, godkendelser og yderligere information findes på internettet på **www.prelectronics.dk**

UK Documentation, permits and other information can be found on the internet at **www.prelectronics.com**

FR La documentation et toute autre information peuvent être trouvées sur l'Internet sur notre site: **www.prelectronics.fr**

DE Dokumentationen, Zulassungen und andere Informationen können auf unserer Internet-Seite unter **www.prelectronics.de** gefunden und abgerufen werden.

BR Documentações, licenças e outras informações podem ser encontradas no site **www.prelectronics.com**