PERFORMANCE
MADE
SMARTER

# Product Manual
# *6350*
# *PROFIBUS PA / FOUNDATION Fieldbus Transmitter*

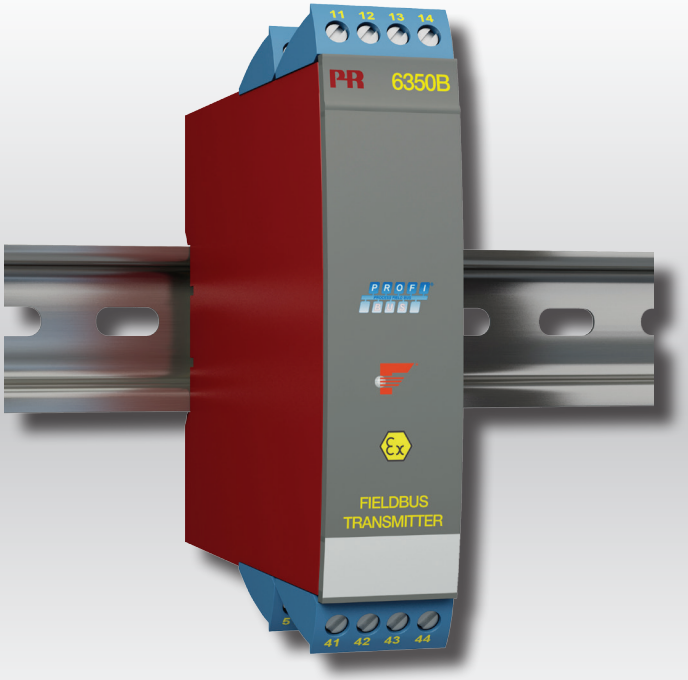


ATEX IECEx FM APPROVED C US EAC CE

TEMPERATURE | I.S. INTERFACES | COMMUNICATION INTERFACES | MULTIFUNCTIONAL | ISOLATION | DISPLAY

No. 6350V104-UK
From serial no.: 151770053

PR electronics

# 6 Product Pillars
# *to meet your every need*

## Individually outstanding, unrivalled in combination

With our innovative, patented technologies, we make signal conditioning smarter and simpler. Our portfolio is composed of six product areas, where we offer a wide range of analog and digital devices covering over a thousand applications in industrial and factory automation. All our products comply with or surpass the highest industry standards, ensuring reliability in even the harshest of environments and have a 5-year warranty for greater peace of mind.

Temperature

Our range of temperature transmitters and sensors provides the highest level of signal integrity from the measurement point to your control system. You can convert industrial process temperature signals to analog, bus or digital communications using a highly reliable point-to-point solution with a fast response time, automatic self-calibration, sensor error detection, low drift, and top EMC performance in any environment.

I.S. Interface

We deliver the safest signals by validating our products against the toughest safety standards. Through our commitment to innovation, we have made pioneering achievements in developing I.S. interfaces with SIL 2 Full Assessment that are both efficient and cost-effective. Our comprehensive range of analog and digital intrinsically safe isolation barriers offers multifunctional inputs and outputs, making PR an easy-to-implement site standard. Our backplanes further simplify large installations and provide seamless integration to standard DCS systems.

Communication

We provide inexpensive, easy-to-use, future-ready communication interfaces that can access your PR installed base of products. The detachable 4501 Local Operator Interface (LOI) allows for local monitoring of process values, device configuration, error detection and signal simulation. The next generation, our 4511 Remote Operator Interface (ROI) does all that and more, adding remote digital communications via Modbus/RTU, while the analog output signals are still available for redundancy.
With the 4511 you can further expand connectivity with a PR gateway, which connects via industrial Ethernet, wirelessly through a Wi-Fi router or directly with the devices using our Portable Plant Supervisor (PPS) application. The PPS app is available for iOS, Android and Windows.

Multifunction

Our unique range of single devices covering multiple applications is easily deployable as your site standard. Having one variant that applies to a broad range of applications can reduce your installation time and training, and greatly simplify spare parts management at your facilities. Our devices are designed for long-term signal accuracy, low power consumption, immunity to electrical noise and simple programming.

Isolation

Our compact, fast, high-quality 6 mm isolators are based on microprocessor technology to provide exceptional performance and EMC-immunity for dedicated applications at a very low total cost of ownership. They can be stacked both vertically and horizontally with no air gap separation between units required.

Display

Our display range is characterized by its flexibility and stability. The devices meet nearly every demand for display readout of process signals, and have universal input and power supply capabilities. They provide a real-time measurement of your process value no matter the industry, and are engineered to provide a user-friendly and reliable relay of information, even in demanding environments.

# PROFIBUS PA / FOUNDATION Fieldbus Transmitter 6350

# Table of contents

# PROFIBUS PA / FOUNDATION Fieldbus Transmitter
# 6350

- PROFIBUS PA ver. 3.0
- FOUNDATION Fieldbus ver. ITK 4.6
- Automatic switch between protocols
- FISCO-certified
- 1- or 2-channel version

### Application

- Linearized temperature measurement with RTD or TC sensor.
- Converts analog mA signals into digital values on the bus communication.
- Difference, average or redundancy temperature measurement with RTD or TC sensor.
- Linear resistance, potentiometer and bipolar mV measurement.

### Technical characteristics

- Bus transmitter with both Profibus PA and Foundation Fieldbus communication. A unique switch function ensures automatic shift between the two protocols.
- Set-up for Profibus PA can be done via Siemens Simatic® PDM®, ABB Melody / Harmony and Metso DNA software and for Foundation Fieldbus via Emerson DeltaV, Yokogawa CS 1000 / CS 3000, ABB Melody / Harmony and Honeywell Experion software.
- Built-in simulation mode function.
- Polarity-independent bus connection.
- 24 bit A/D converter ensures high resolution.
- Profibus PA function blocks: 2 analog.
- Foundation Fieldbus function blocks: 2 analog and 1 PID.
- Foundation Fieldbus capability: LAS or Basic.

### Mounting / installation

- Mounted vertically or horizontally on a DIN rail. Using the 2-channel version up to 84 channels per metre can be mounted.
- The 6350B can be mounted in zone 0, 1, 2 and zone 20, 21, 22 including M1 / Class I/II/ III, Division 1, Groups A, B, C, D.

## Applications

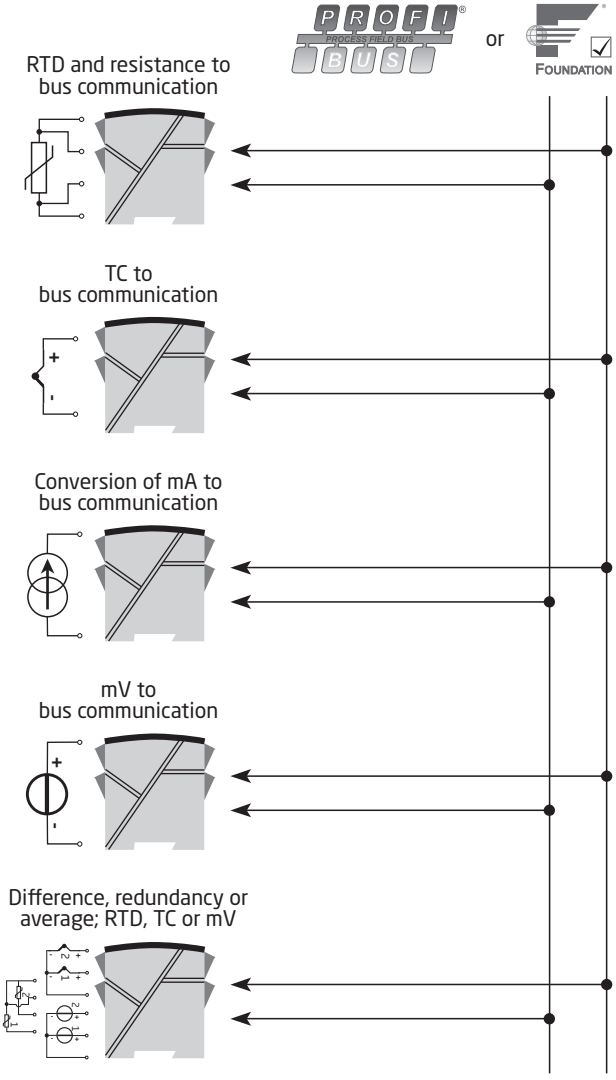

## Order

| Type | Version | Galvanic isolation | Channels |
|---|---|---|---|
| **6350** | Standard : A<br>ATEX, CSA, FM & IECEx : B | 1500 VAC : 2 | Single : A<br>Double : B |

*NB! Please remember to order CJC connectors type 5910 / 5910Ex (channel 1) and 5913 / 5913Ex (channel 2) for TC inputs with an internal CJC.

## Electrical specifications

**Environmental conditions:**

Specification range . . . . . -40°C to +85°C
Storage temperature . . . . . -40°C to +85°C
Calibration temperature. . . . . 20...28°
Humidity. . . . . < 95% RH (non-cond.)
Protection degree . . . . . IP20

**Mechanical specifications:**

Dimensions (H x W x D) . . . . . 109 x 23.5 x 104 mm
Weight (1 / 2 channels) . . . . . 145 / 185 g
DIN rail type. . . . . DIN EN/IEC 60715 - 35 mm
Wire size. . . . . 0.13...2.08 $mm^2$ / AWG 26...14 stranded wire
Screw terminal torque. . . . . 0.5 Nm

**Common specifications:**

Supply voltage, DC
  Standard. . . . . 9.0...32 VDC
  ATEX, CSA, FM & IECEx . . . . . 9.0...30 VDC
Internal consumption per channel. . . . . < 11 mA
Isolation voltage, test. . . . . 1.5 kVAC for 60 s
Isolation voltge, operation . . . . . 50 VRMS / 75 VDC
Warm-up time. . . . . 30 s
Signal / noise ratio. . . . . Min. 60 dB
Response time (programmable) . . . . . 1...60 s
Response time (bus communication) . . . . . 100 ms
Signal dynamics, input . . . . . 24 bit
Effect of supply voltage variation. . . . . < 0.005% of span / VDC

Accuracy, the greater of general and basic values:

| General values | | |
|---|---|---|
| Input type | Absolute accuracy | Temperature coefficient |
| mA | ≤ ±0.05% of reading | ≤ ±0.003% of reading / °C |
| Other types | ≤ ±0.05% of reading | ≤ ±0.002% of reading / °C |

| Basic values | | |
|---|---|---|
| Input type | Basic accuracy | Temperature coefficient |
| Pt100 and Pt1000 | ≤ ±0.1°C | ≤ ±0.002°C / °C |
| Ni100...Ni1000 | ≤ ±0.15°C | ≤ ±0.002°C / °C |
| Cu10 | ≤ ±1.3°C | ≤ ±0.02°C / °C |
| Lin. R | ≤ ±0.05 Ω | ≤ ±0.002 Ω / °C |
| mA | ≤ ±1 µA | ≤ ±0.06 µA / °C |
| mV | ≤ ±10 µV | ≤ ±0.2 µV / °C |
| TC type:<br>E, J, K, L, N, T, U | ≤ ±0.5°C | ≤ ±0.010°C / °C |
| TC type:<br>B, R, S, W3, W5 | ≤ ±1°C | ≤ ±0.025°C / °C |

EMC immunity influence . . . . . < ±0.1% of reading
Extended EMC immunity:
NAMUR NE 21, A criterion, burst . . . . . < ±1% of reading

**Electrical specifications, input:**

**RTD and linear resistance input:**

| RTD type | Min. value | Max. value | Standard |
|---|---|---|---|
| Pt25...Pt1000 | -200°C | +850°C | IEC 60751 / JIS C 1604 |
| Ni25...Ni1000 | -60°C | +250°C | DIN 43760 |
| Cu10...Cu1000 | -200°C | +260°C | $\alpha$ = 0,00427 |
| Lin. resistance | 0 Ω | 10 kΩ | - |
| Potentiometer | 0 Ω | 100 kΩ | - |

Cable resistance per wire . . . . . 50 Ω
Sensor current . . . . . Nom. 0.2 mA
Effect of sensor cable resistance (3- / 4-wire) . . . . . < 0.002 Ω/Ω
Sensor error detection . . . . . Yes
Short circuit detection. . . . . < 15 Ω

**Bipolar current input:**
Measurement range . . . . . -100...+100 mA
Input resistance . . . . . 10 Ω + PTC < 20 Ω
Cable breakage detection (4...20 mA). . . . . < 0,3 mA

**Bipolar mV input:**
Measurement range . . . . . -800...+800 mV
Min. measurement range (span) . . . . . 2.5 mV
Input resistance . . . . . 10 MΩ
Short circuit detection. . . . . < 3 mV

**TC input:**

| Type | Min. temperature | Max. temperature | Standard |
|---|---|---|---|
| B | +400°C | +1820°C | IEC 60584-1 |
| E | -100°C | +1000°C | IEC 60584-1 |
| J | -100°C | +1200°C | IEC 60584-1 |
| K | -180°C | +1372°C | IEC 60584-1 |
| L | -200°C | +900°C | DIN 43710 |
| N | -180°C | +1300°C | IEC 60584-1 |
| R | -50°C | +1760°C | IEC 60584-1 |
| S | -50°C | +1760°C | IEC 60584-1 |
| T | -200°C | +400°C | IEC 60584-1 |
| U | -200°C | +600°C | DIN 43710 |
| W3 | 0°C | +2300°C | ASTM E988-90 |
| W5 | 0°C | +2300°C | ASTM E988-90 |
| Ext. CJC | -40°C | +135°C | IEC60751 |

Cold junction compensation . . . . . < ±0.5°C
Sensor error detection . . . . . Yes
Sensor error current:
When detecting . . . . . Nom. 2 μA
Else. . . . . 0 μA
Short circuit detection. . . . . < 3 mV

**Output:**

**PROFIBUS PA connection:**
PROFIBUS PA protocol. . . . . Profile A&B, ver. 3.0
PROFIBUS PA protocol standard . . . . . EN 50170 vol. 2
PROFIBUS PA address (at delivery) . . . . . 126
PROFIBUS PA function blocks . . . . . 2 analog

**FOUNDATION Fieldbus connection:**
FOUNDATION Fieldbus protocol . . . . . FF protocol
FOUNDATION Fieldbus protocol standard . . . . . FF design specifications
FOUNDATION Fieldbus capability . . . . . LAS or Basic
FOUNDATION Fieldbus version . . . . . ITK 4.6
FOUNDATION Fieldbus function blocks. . . . . 2 analog and 1 PIDA

**Approvals:**
EMC 2004/108/EC. . . . . EN 61326-1
EAC TR-CU 020/2011 . . . . . EN 61326-1

**Ex / I.S.:**
ATEX 94/9/EC . . . . . KEMA 03ATEX1012 X
IECEx. . . . . IECEx DEK 14.0071X
CSA . . . . . 1418937
FM . . . . . 3015609
EAC Ex TR-CU 012/2011 . . . . . RU C-DK.GB08.V.00410

# Connections

Connections with two sensors can be configured for twomeasurements, difference, average or redundancy

## Inputs:

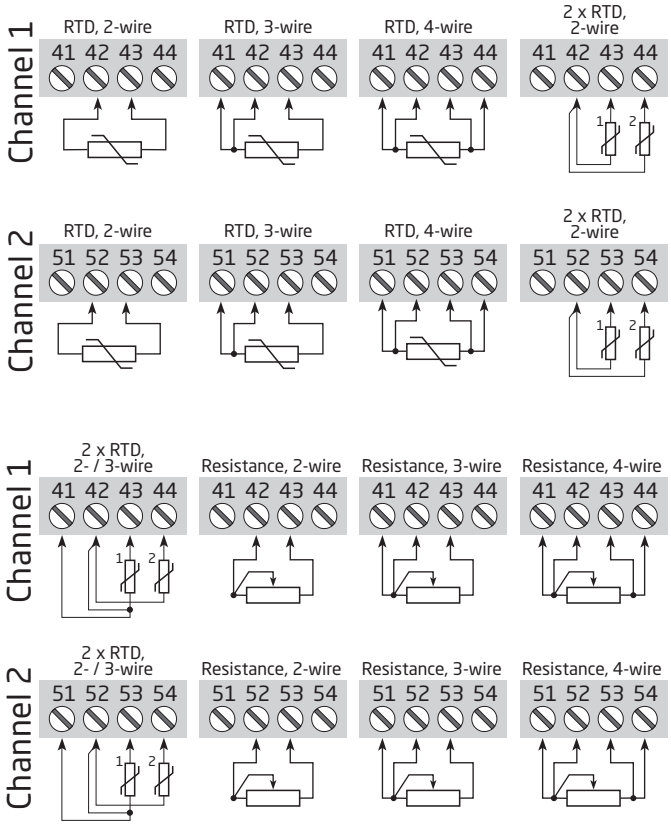

# Connections

Connections with two sensors can be configured for two measurements, difference, average or redundancy

## Inputs:

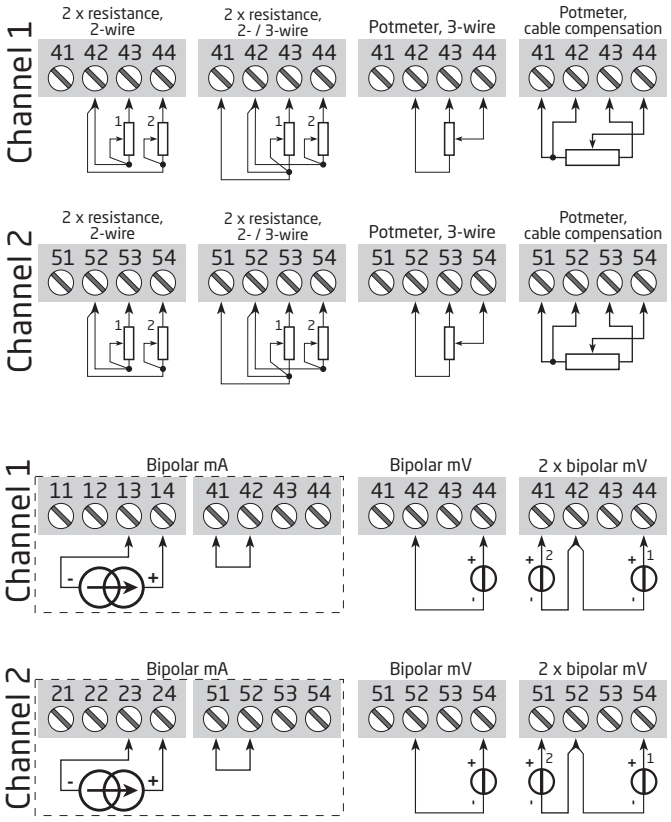

# Connections

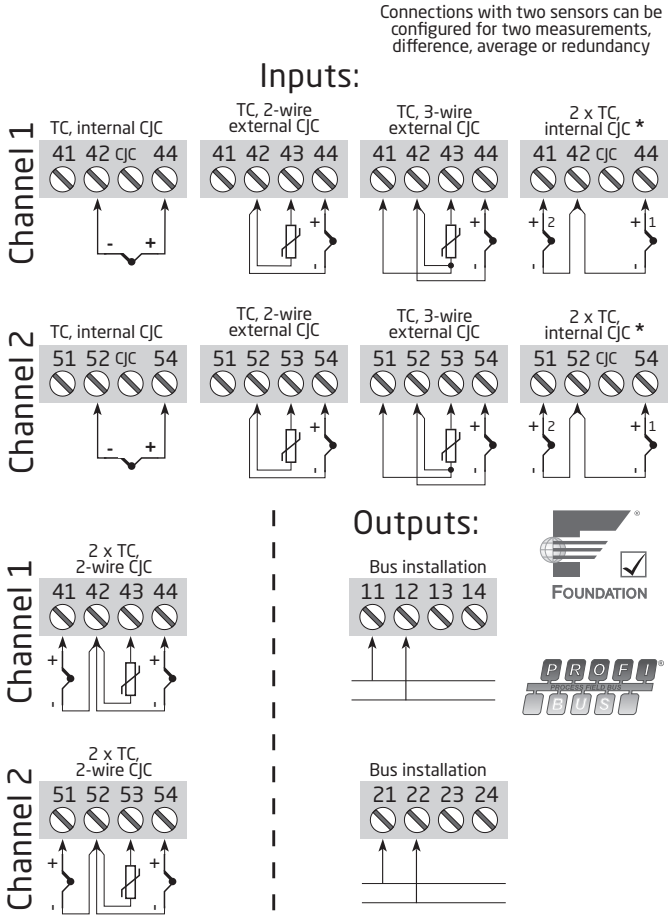

# Block diagram

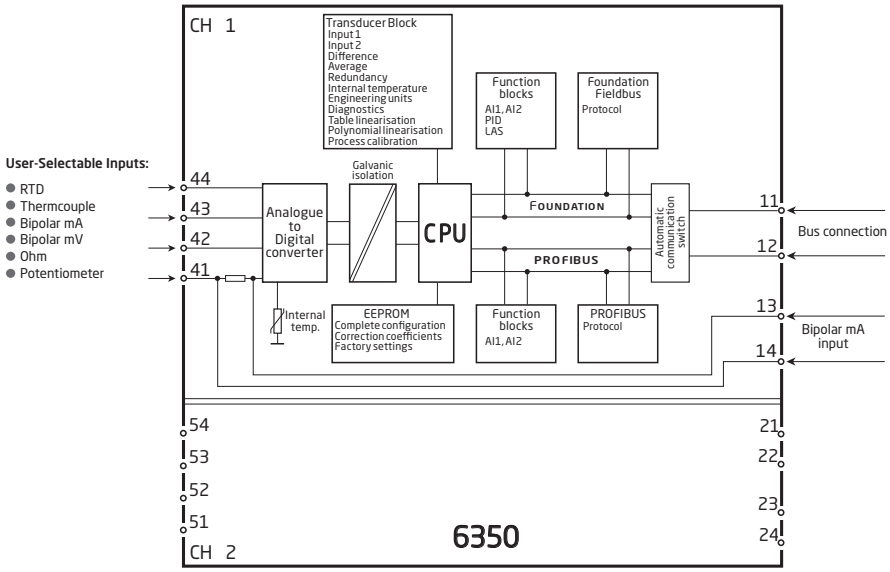


# Bus installation

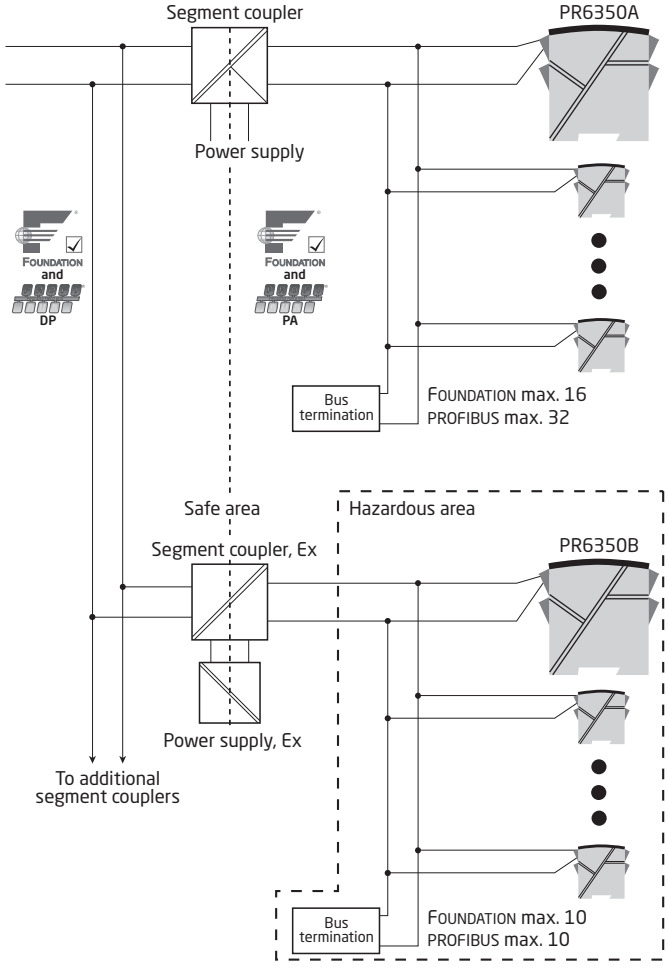

LERBAKKEN 10, 8410 RØNDE DENMARK. WWW.PRELECTRONICS.COM

# ATEX Installation drawing

For safe installation of 6350A the following must be observed. The module shall only be installed by qualified personnel who are familiar with the national and international laws, directives and standards that apply to this area.
Year of manufacture can be taken from the first two digits in the serial number.

ATEX Certificate KEMA 03ATEX1012 X

Marking

II 3 G Ex nA [ic] IIC T6…T4 Gc
II 3 G Ex ic IIC T6…T4 Gc
II 3 D Ex ic IIIC Dc

Standards: EN 60079-0 : 2012, EN 60079-11 : 2012, EN 60079-15

T6: -40ºC to 60 ºC
T5: -40ºC to 75 ºC
T4: -40ºC to 85 ºC

**Terminal:**
41-44 and 51-54

Ex nA [ic]
Uo=5.7 V
Io=8.4 mA
Po=12 mW
Co=40 µF
Lo=200 mH

**Terminal :**
13,14 and 23,24

Ex ic:
Ii = ±100 mA

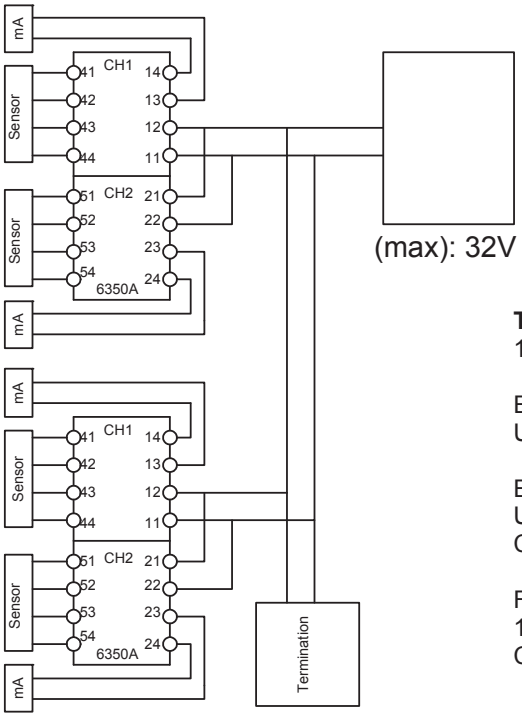


**Terminal:**
11,12 and 21,22

Ex nA
Umax = 32 VDC

Ex ic:
Ui = 32 VDC
Ci = 2 nF, Li = 1 µH

FNICO:
17.5 V
Ci = 2 nF, Li = 1 µH

General installation instructions
To avoid risk of ignition during installation and maintenance appropriate safety measures against electrostatic discharge (ESD) are to be considered. Install in pollution degree 2 or better.

Profibus / Foundation Fieldbus Transmitter Type 6350A2x, for rail mounting, with one or two independent channels, converts the measurement signals of temperature sensors, mV signals or mA signals into a Profibus PA fieldbus or to a Foundation Fieldbus.
x = A (Single Channel) and x = B (Double Channel).

The Sensor Circuit is galvanically connected to the Current Measurement Input Circuit and only one circuit can be connected at a time.
The Sensor Circuit and the Current Measurement Input Circuit are not infallibly galvanic isolated from the Fieldbus input circuit. However, the galvanic isolation is capable of withstanding a test voltage of 500Vac during 1 minute.

For marking Ex ic IIC T6 ... T4 Gc
The transmitter shall be mounted in an enclosure that provides a degree of protection of at least IP20 according to EN/IEC 60529 and that is suitable for the application and correctly installed.
Ambient temperature range is specified under chapter “Electrical and thermal data”.

For marking Ex ic IIIC Dc
The transmitter shall be mounted in an enclosure that provides a degree of protection of at least IP6X according to EN/IEC 60529, and that is suitable for the application and correctly installed.
The surface temperature of the enclosure is equal to the ambient temperature +20 K for a dust layer with a maximum thickness of 5 mm.
Ambient temperature range: -40 °C to +85 °C

For marking Ex nA [ic] IIC T6 ... T4 Gc
The transmitter shall be installed in an enclosure in type of protection Ex n or Ex e, providing a degree of protection of at least IP54, and that is suitable for the application and correctly installed.
Ambient temperature range:
-40 °C to +85 °C for temperature class T4,
-40 °C to +75 °C for temperature class T5,
-40 °C to +60 °C for temperature class T6.

Fieldbus Input Circuits (terminals 11 and 12, respectively 21 and 22):
in type of protection non sparking Ex nA, with
Umax ≤ 32 VDC, or

in type of protection intrinsic safety Ex ic IIC or Ex ic IIIC, for connection to an intrinsically safe circuit, with the following maximum values (per circuit):
$U_i$ = 32 V; $C_i$ = 2 nF; $L_i$ = 1 µH;
or for connection to a intrinsically safe circuit in accordance with FNICO, with following maximum values:
$U_i$ = 17.5 V; $C_i$ = 2 nF; $L_i$ = 1 µH;

Sensor Circuit (terminals 41 ... 44, respectively 51 … 54), in type of protection intrinsic safety Ex ic IIC or Ex ic IIIC, with the following maximum values (per circuit):
$U_o$ = 5.7 V; $I_o$ = 8.4 mA; $P_o$ = 12 mW; $C_o$ = 40 µF; $L_o$ = 200 mH.

Current Measurement Input Circuits (terminals 13 and 14 , respectively 23 and 24):
in type of protection intrinsic safety Ex ic IIC or Ex ic IIIC, with the following maximum values (per circuit):
$I_i$ = -100 mA to +100 mA;

LERBAKKEN 10, 8410 RØNDE DENMARK. WWW.PRELECTRONICS.COM

# ATEX Installation drawing

For safe installation of 6350B the following must be observed. The module shall only be installed by qualified personnel who are familiar with the national and international laws, directives and standards that apply to this area.
Year of manufacture can be taken from the first two digits in the serial number.

| | |
|---|---|
| ATEX Certificate | KEMA 03ATEX 1012 X |
| Marking | II 1 G Ex ia IIC T6...T4 Ga or<br>II 2 (1) G Ex ib [ia Ga] IIC T6...T4 Gb<br>II 1 D Ex ia IIIC Da<br>I M 1 Ex ia I Ma |
| Standards | EN 60079-0 : 2012, EN 60079-11 : 2012 |

**General installation instructions**
Electrostatic charges on the transmitter enclosure shall be avoided.
Install in pollution degree 2 or better.

Profibus / Foundation Fieldbus Transmitter Type 6350B2x, for rail mounting, with one or two independent channels, converts the measurement signals of temperature sensors, mV signals or mA signals into a Profibus PA fieldbus or to a Foundation Fieldbus.
x = A (Single Channel) and x = B (Double Channel).

For marking Ex ia IIC T6 ... T4 Ga
The transmitter shall be mounted in an enclosure that provides a degree of protection of at least IP20 according to EN/IEC 60529 and that is suitable for the application and correctly installed.
Ambient temperature range is specified under chapter “Electrical and thermal data”.

For marking Ex ia IIIC Da
The transmitter shall be mounted in an enclosure that provides a degree of protection of at least IP6X according to EN/IEC 60529, and that is suitable for the application and correctly installed.
The surface temperature of the enclosure is equal to the ambient temperature +20 K for a dust layer with a maximum thickness of 5 mm.
Ambient temperature range: -40 °C to +85 °C

For marking Ex ia I Ma
The transmitter shall be mounted in an enclosure that provides a degree of protection of at least IP6X according to EN/IEC 60529, and that is suitable for the application and correctly installed.
Ambient temperature range: -40 °C to +85 °C

Sensor Circuit and the Current Measurement Input Circuit
The Sensor Circuit is galvanically connected to the Current Measurement Input Circuit and only one circuit can be connected at a time.
The Input Circuits are not infallibly galvanic isolated from the Fieldbus input circuit. However, the galvanic isolation is capable of withstanding a test voltage of 500Vac during 1 minute.

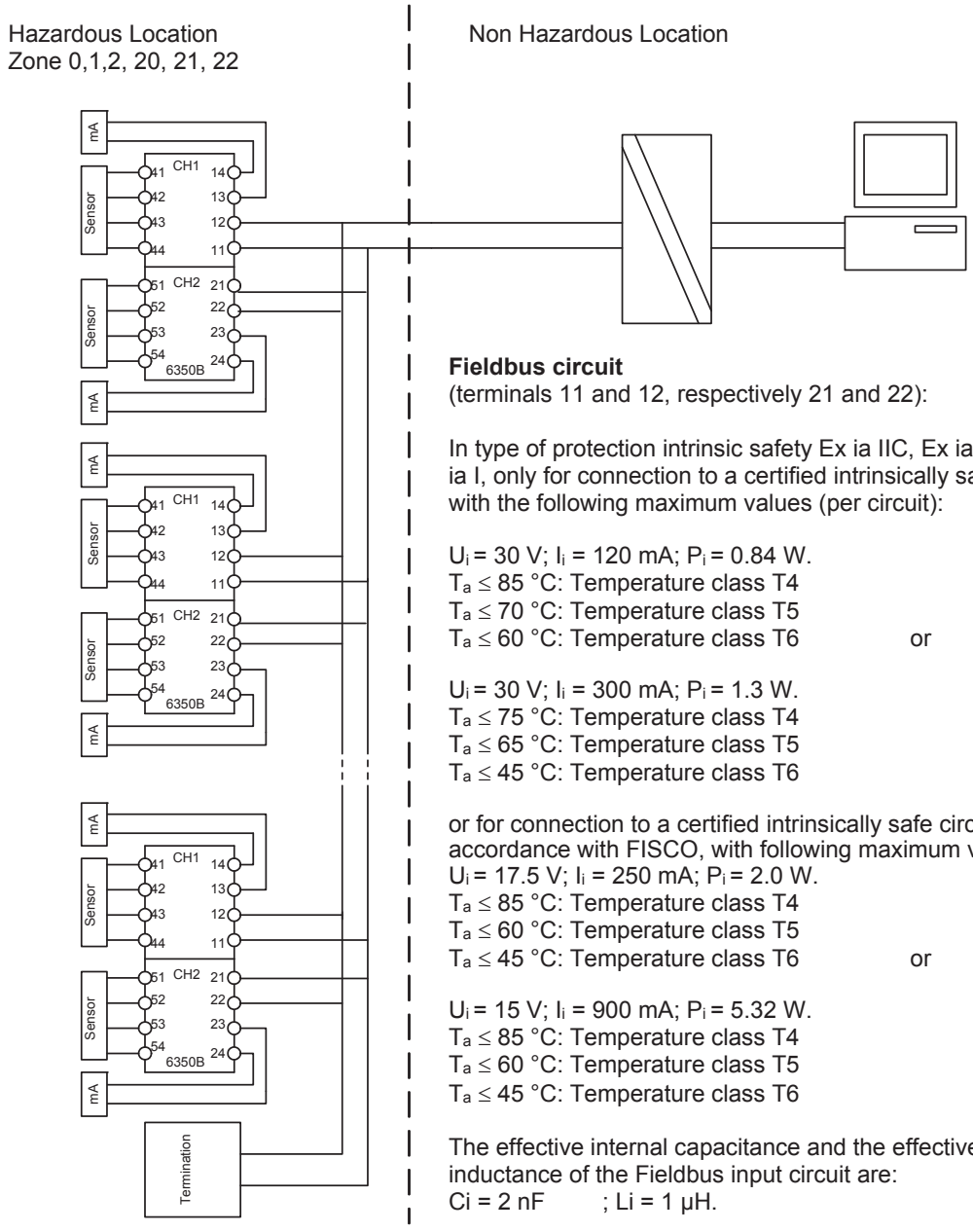


**Fieldbus circuit**
(terminals 11 and 12, respectively 21 and 22):

In type of protection intrinsic safety Ex ia IIC, Ex ia IIIC or Ex ia I, only for connection to a certified intrinsically safe circuit, with the following maximum values (per circuit):

$U_i$ = 30 V; $I_i$ = 120 mA; $P_i$ = 0.84 W.
$T_a \leq$ 85 °C: Temperature class T4
$T_a \leq$ 70 °C: Temperature class T5
$T_a \leq$ 60 °C: Temperature class T6 or

$U_i$ = 30 V; $I_i$ = 300 mA; $P_i$ = 1.3 W.
$T_a \leq$ 75 °C: Temperature class T4
$T_a \leq$ 65 °C: Temperature class T5
$T_a \leq$ 45 °C: Temperature class T6

or for connection to a certified intrinsically safe circuit in accordance with FISCO, with following maximum values:
$U_i$ = 17.5 V; $I_i$ = 250 mA; $P_i$ = 2.0 W.
$T_a \leq$ 85 °C: Temperature class T4
$T_a \leq$ 60 °C: Temperature class T5
$T_a \leq$ 45 °C: Temperature class T6 or

$U_i$ = 15 V; $I_i$ = 900 mA; $P_i$ = 5.32 W.
$T_a \leq$ 85 °C: Temperature class T4
$T_a \leq$ 60 °C: Temperature class T5
$T_a \leq$ 45 °C: Temperature class T6

The effective internal capacitance and the effective internal inductance of the Fieldbus input circuit are:
Ci = 2 nF ; Li = 1 µH.

Sensor Circuit (terminals 41…44, respectively 51…54):
in type of protection intrinsic safety Ex ia IIC, Ex ia IIIC or Ex ia I, with following maximum values:
$U_o$ = 5.7 V; $I_o$ = 8.4 mA; $P_o$ = 12 mW; $C_o$ = 40 µF; $L_o$ = 200 mH.

Current Measurement Input Circuit (terminals 13 and 14, respectively 23 and 24):
in type of protection intrinsic safety Ex ia IIC, Ex ia IIIC or Ex ia I, only for connection to a certified intrinsically safe circuit, with the following maximum values (per circuit):
$U_i$ = 30 V, $I_i$ = 140 mA, $P_i$ = 1 W, $C_i$ = 0 nF, $L_i$ = 0 mH

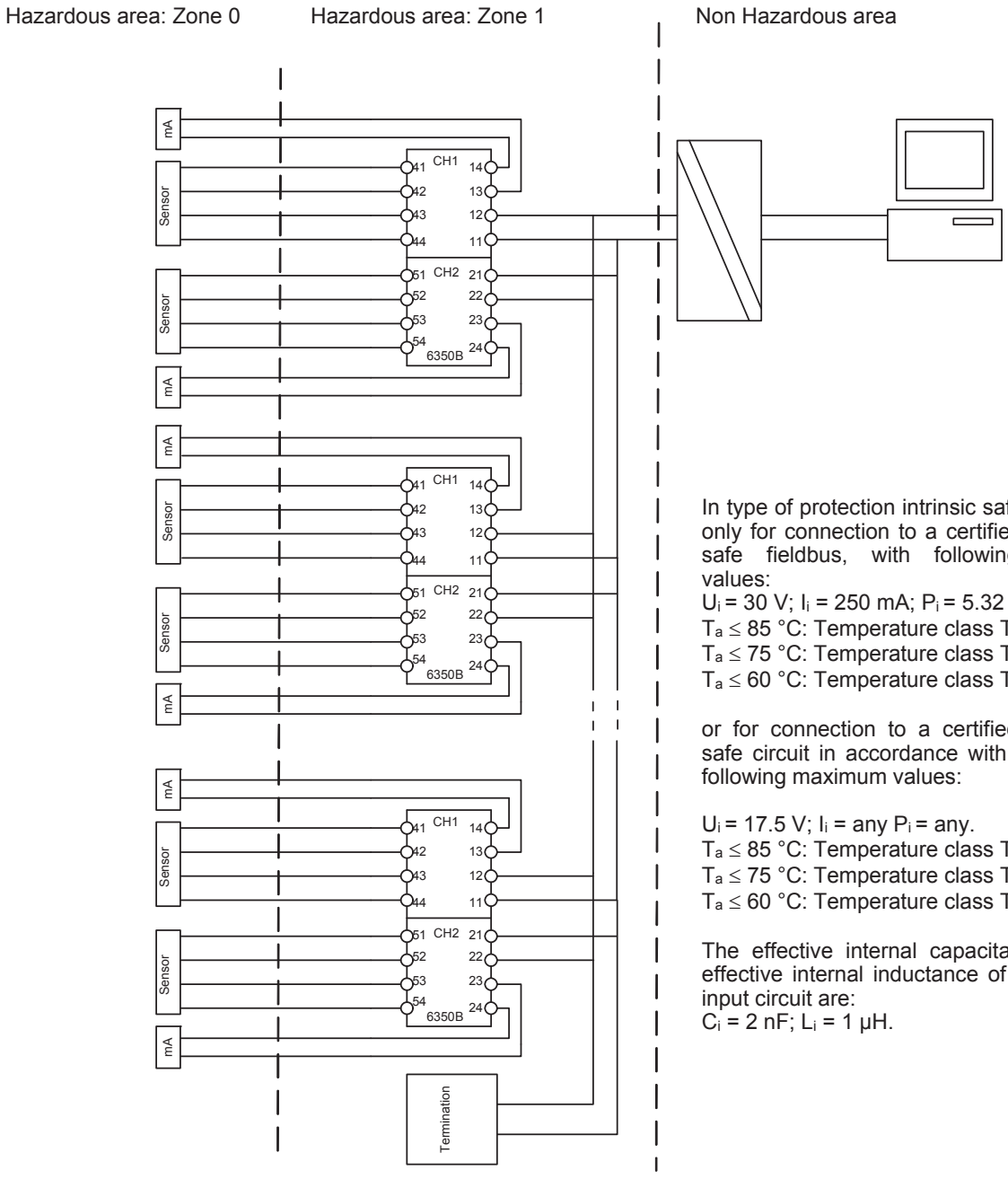


In type of protection intrinsic safety Ex ib IIC, only for connection to a certified intrinsically safe fieldbus, with following maximum values:
$U_i$ = 30 V; $I_i$ = 250 mA; $P_i$ = 5.32 W.
$T_a \leq$ 85 °C: Temperature class T4
$T_a \leq$ 75 °C: Temperature class T5
$T_a \leq$ 60 °C: Temperature class T6

or for connection to a certified intrinsically safe circuit in accordance with FISCO, with following maximum values:

$U_i$ = 17.5 V; $I_i$ = any $P_i$ = any.
$T_a \leq$ 85 °C: Temperature class T4
$T_a \leq$ 75 °C: Temperature class T5
$T_a \leq$ 60 °C: Temperature class T6

The effective internal capacitance and the effective internal inductance of the Fieldbus input circuit are:
$C_i$ = 2 nF; $L_i$ = 1 µH.

Sensor Circuit (terminals 41…44, respectively 51…54):
in type of protection intrinsic safety Ex ia IIC, Ex ia IIIC or Ex ia I, with following maximum values:
$U_o$ = 5.7 V; $I_o$ = 8.4 mA; $P_o$ = 12 mW; $C_o$ = 40 µF; $L_o$ = 200 mH.

Current Measurement Input Circuit (terminals 13 and 14, respectively 23 and 24):
in type of protection intrinsic safety Ex ia IIC, Ex ia IIIC or Ex ia I, only for connection to a certified intrinsically safe circuit, with the following maximum values (per circuit):
$U_i$ = 30 V, $I_i$ = 140 mA, $P_i$ = 1 W, $C_i$ = 0 nF, $L_i$ = 0 mH

LERBAKKEN 10, 8410 RØNDE DENMARK. WWW.PRELECTRONICS.COM

# IECEx Installation drawing

For safe installation of 6350A the following must be observed. The module shall only be installed by qualified personnel who are familiar with the national and international laws, directives and standards that apply to this area.
Year of manufacture can be taken from the first two digits in the serial number.

IECEx Certificate IECEx DEK 14.0071X

Marking

Ex nA [ic] IIC T6 Gc
Ex ic IIC T6 Gc
Ex ic IIIC Dc

Standards: IEC 60079-0 : 2011, IEC 60079-11 : 2011, IEC 60079-15 : 2010

T6: -40ºC to 60 ºC
T5: -40°C to 75 °C
T4: -40ºC to 85 ºC

**Terminal:**
41-44 and 51-54

Ex nA [ic]
Uo=5.7 V
Io=8.4 mA
Po=12 mW
Co=40 µF
Lo=200 mH

**Terminal :**
13,14 and 23,24

Ex ic:
Ii = ±100 mA

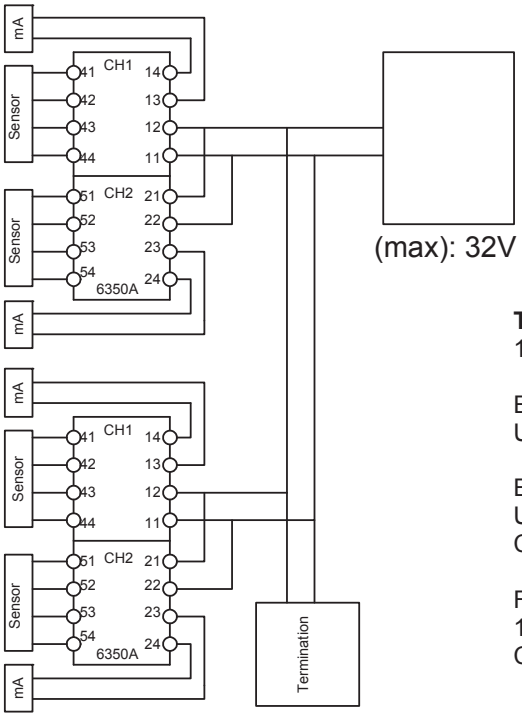


**Terminal:**
11,12 and 21,22

Ex nA
Umax = 32 VDC

Ex ic:
Ui = 32 VDC
Ci = 2 nF, Li = 1 µH

FNICO :
17.5 V
Ci = 2 nF, Li = 1 µH

General installation instructions
To avoid risk of ignition during installation and maintenance appropriate safety measures against electrostatic discharge (ESD) are to be considered. Install in pollution degree 2 or better.

Profibus / Foundation Fieldbus Transmitter Type 6350A2x, for rail mounting, with one or two independent channels, converts the measurement signals of temperature sensors, mV signals or mA signals into a Profibus PA fieldbus or to a Foundation Fieldbus.
x = A (Single Channel) and x = B (Double Channel).

The Sensor Circuit is galvanically connected to the Current Measurement Input Circuit and only one circuit can be connected at a time.
The Sensor Circuit and the Current Measurement Input Circuit are not infallibly galvanic isolated from the Fieldbus input circuit. However, the galvanic isolation is capable of withstanding a test voltage of 500Vac during 1 minute.

For marking Ex ic IIC T6 ... T4 Gc
The transmitter shall be mounted in an enclosure that provides a degree of protection of at least IP20 according to EN/IEC 60529 and that is suitable for the application and correctly installed.
Ambient temperature range is specified under chapter “Electrical and thermal data”.

For marking Ex ic IIIC Dc
The transmitter shall be mounted in an enclosure that provides a degree of protection of at least IP6X according to EN/IEC 60529, and that is suitable for the application and correctly installed.
The surface temperature of the enclosure is equal to the ambient temperature +20 K for a dust layer with a maximum thickness of 5 mm.
Ambient temperature range: -40 °C to +85 °C

For marking Ex nA [ic] IIC T6 ... T4 Gc
The transmitter shall be installed in an enclosure in type of protection Ex n or Ex e, providing a degree of protection of at least IP54, and that is suitable for the application and correctly installed.
Ambient temperature range:
-40 °C to +85 °C for temperature class T4,
-40 °C to +75 °C for temperature class T5,
-40 °C to +60 °C for temperature class T6.

Fieldbus Input Circuits (terminals 11 and 12, respectively 21 and 22):
in type of protection non sparking Ex nA, with
Umax ≤ 32 VDC, or

in type of protection intrinsic safety Ex ic IIC or Ex ic IIIC, for connection to an intrinsically safe circuit, with the following maximum values (per circuit):
$U_i$ = 32 V; $C_i$ = 2 nF; $L_i$ = 1 µH;
or for connection to a intrinsically safe circuit in accordance with FNICO, with following maximum values:
$U_i$ = 17.5 V; $C_i$ = 2 nF; $L_i$ = 1 µH;

Sensor Circuit (terminals 41 ... 44, respectively 51 … 54), in type of protection intrinsic safety Ex ic IIC or Ex ic IIIC, with the following maximum values (per circuit):
$U_o$ = 5.7 V; $I_o$ = 8.4 mA; $P_o$ = 12 mW; $C_o$ = 40 µF; $L_o$ = 200 mH.

Current Measurement Input Circuits (terminals 13 and 14 , respectively 23 and 24):
in type of protection intrinsic safety Ex ic IIC or Ex ic IIIC, with the following maximum values (per circuit):
$I_i$ = -100 mA to +100 mA;

# IECEx Installation drawing

For safe installation of 6350B the following must be observed. The module shall only be installed by qualified personnel who are familiar with the national and international laws, directives and standards that apply to this area.
Year of manufacture can be taken from the first two digits in the serial number.

| | |
|---|---|
| IECEx Certificate | DEK 14.0071X |
| Marking | Ex ia IIC T6..T4 Ga<br>Ex ib [ia Ga] IIC T6..T4 Gb<br>Ex ia IIIC Da<br>Ex ia I Ma |
| Standards | IEC60079-11:2011, IEC60079-0: 2011 |

**General installation instructions**
Electrostatic charges on the transmitters enclosure shall be avoided.
Install in pollution degree 2 or better.

Profibus / Foundation Fieldbus Transmitter Type 6350B2x, for rail mounting, with one or two independent channels, converts the measurement signals of temperature sensors, mV signals or mA signals into a Profibus PA fieldbus or to a Foundation Fieldbus.
x = A (Single Channel) and x = B (Double Channel).

For marking Ex ia IIC T6 ... T4 Ga
The transmitter shall be mounted in an enclosure that provides a degree of protection of at least IP20 according to EN/IEC 60529 and that is suitable for the application and correctly installed.
Ambient temperature range is specified under chapter “Electrical and thermal data”.

For marking Ex ia IIIC Da
The transmitter shall be mounted in an enclosure that provides a degree of protection of at least IP6X according to EN/IEC 60529, and that is suitable for the application and correctly installed.
The surface temperature of the enclosure is equal to the ambient temperature +20 K for a dust layer with a maximum thickness of 5 mm.
Ambient temperature range: -40 °C to +85 °C

For marking Ex ia I Ma
The transmitter shall be mounted in an enclosure that provides a degree of protection of at least IP6X according to EN/IEC 60529, and that is suitable for the application and correctly installed.
Ambient temperature range: -40 °C to +85 °C

Sensor Circuit and the Current Measurement
The Sensor Circuit is galvanically connected to the Current Measurement Input Circuit and only one circuit can be connected at a time.
The Input Circuits are not infallibly galvanic isolated from the Fieldbus input circuit. However, the galvanic isolation is capable of withstanding a test voltage of 500Vac during 1 minute.

**Hazardous Location**
**Zone 0,1,2, 20, 21, 22**

Non Hazardous Location

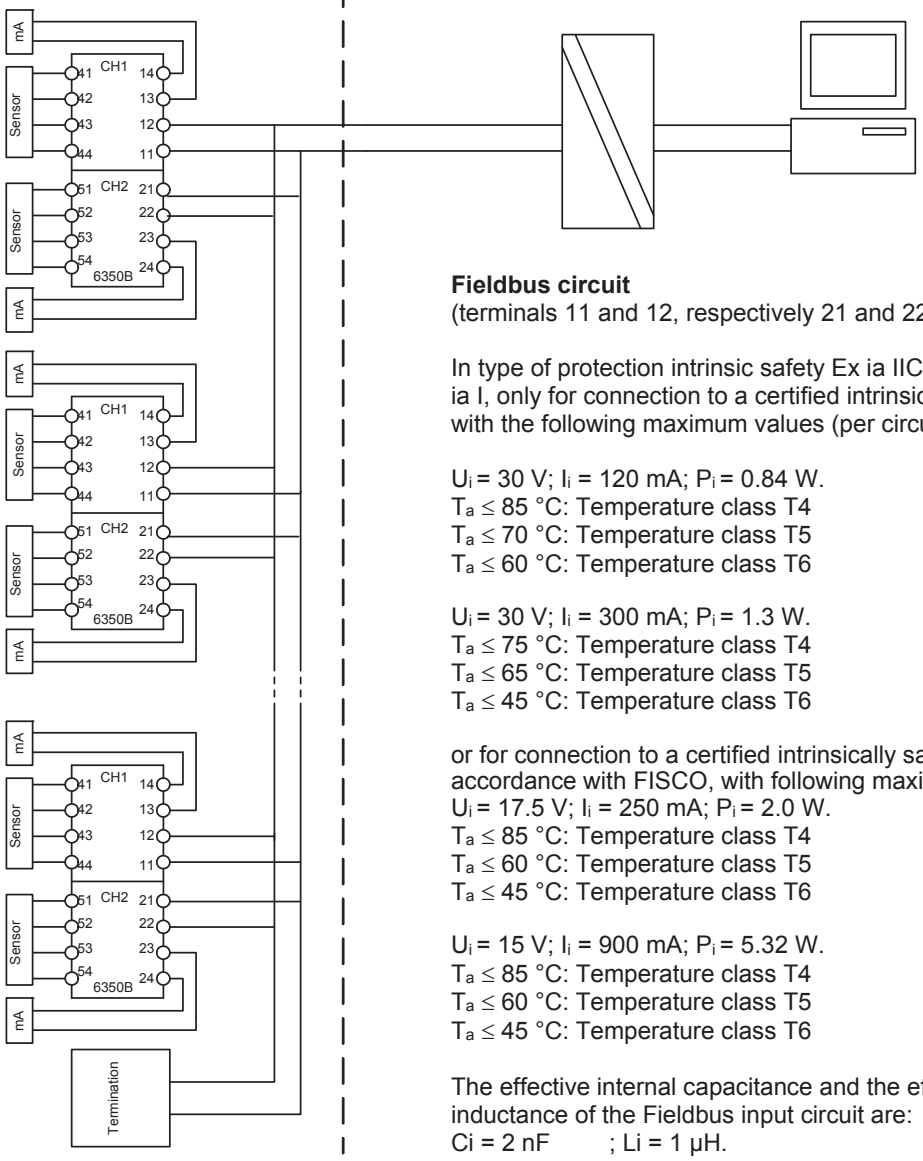


**Fieldbus circuit**
(terminals 11 and 12, respectively 21 and 22):

In type of protection intrinsic safety Ex ia IIC, Ex ia IIIC or Ex ia I, only for connection to a certified intrinsically safe circuit, with the following maximum values (per circuit):

$U_i$ = 30 V; $I_i$ = 120 mA; $P_i$ = 0.84 W.
$T_a \leq$ 85 °C: Temperature class T4
$T_a \leq$ 70 °C: Temperature class T5
$T_a \leq$ 60 °C: Temperature class T6 or

$U_i$ = 30 V; $I_i$ = 300 mA; $P_i$ = 1.3 W.
$T_a \leq$ 75 °C: Temperature class T4
$T_a \leq$ 65 °C: Temperature class T5
$T_a \leq$ 45 °C: Temperature class T6

or for connection to a certified intrinsically safe circuit in accordance with FISCO, with following maximum values:
$U_i$ = 17.5 V; $I_i$ = 250 mA; $P_i$ = 2.0 W.
$T_a \leq$ 85 °C: Temperature class T4
$T_a \leq$ 60 °C: Temperature class T5
$T_a \leq$ 45 °C: Temperature class T6 or

$U_i$ = 15 V; $I_i$ = 900 mA; $P_i$ = 5.32 W.
$T_a \leq$ 85 °C: Temperature class T4
$T_a \leq$ 60 °C: Temperature class T5
$T_a \leq$ 45 °C: Temperature class T6

The effective internal capacitance and the effective internal inductance of the Fieldbus input circuit are:
Ci = 2 nF ; Li = 1 µH.

Sensor Circuit (terminals 41…44, respectively 51…54):
in type of protection intrinsic safety Ex ia IIC, Ex ia IIIC or Ex ia I, with following maximum values:
$U_o$ = 5.7 V; $I_o$ = 8.4 mA; $P_o$ = 12 mW; $C_o$ = 40 µF; $L_o$ = 200 mH.

Current Measurement Input Circuit (terminals 13 and 14, respectively 23 and 24):
in type of protection intrinsic sapfety Ex ia IIC, Ex ia IIIC or Ex ia I, only for connection to a certified intrinsically safe circuit, with the following maximum values (per circuit):
$U_i$ = 30 V, $I_i$ = 140 mA, $P_i$ = 1 W, $C_i$ = 0 nF, $L_i$ = 0 mH

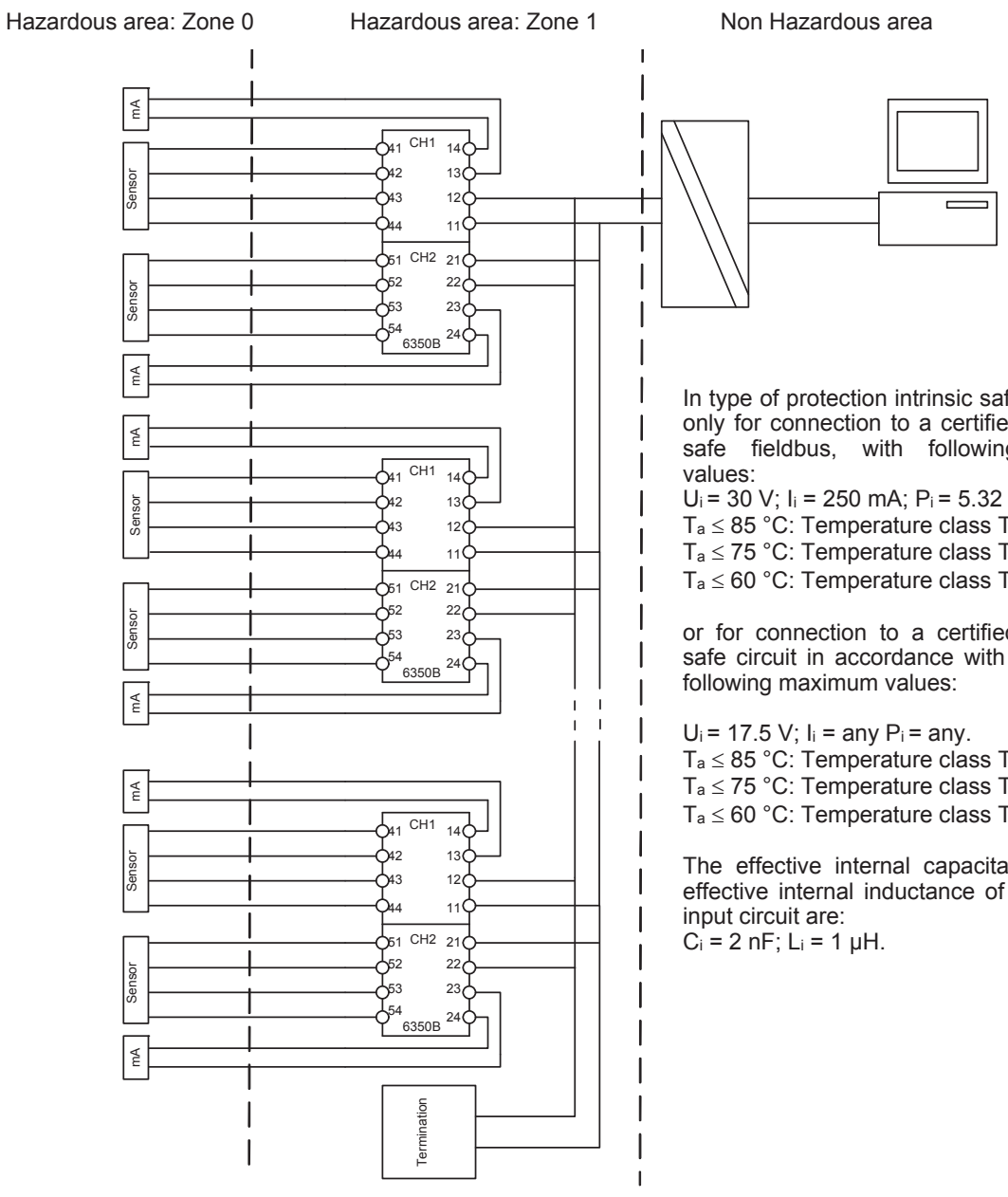


In type of protection intrinsic safety Ex ib IIC, only for connection to a certified intrinsically safe fieldbus, with following maximum values:
$U_i$ = 30 V; $I_i$ = 250 mA; $P_i$ = 5.32 W.
$T_a \leq$ 85 °C: Temperature class T4
$T_a \leq$ 75 °C: Temperature class T5
$T_a \leq$ 60 °C: Temperature class T6

or for connection to a certified intrinsically safe circuit in accordance with FISCO, with following maximum values:

$U_i$ = 17.5 V; $I_i$ = any $P_i$ = any.
$T_a \leq$ 85 °C: Temperature class T4
$T_a \leq$ 75 °C: Temperature class T5
$T_a \leq$ 60 °C: Temperature class T6

The effective internal capacitance and the effective internal inductance of the Fieldbus input circuit are:
$C_i$ = 2 nF; $L_i$ = 1 µH.

Sensor Circuit (terminals 41…44, respectively 51…54):
in type of protection intrinsic safety Ex ia IIC, Ex ia IIIC or Ex ia I, with following maximum values:
$U_o$ = 5.7 V; $I_o$ = 8.4 mA; $P_o$ = 12 mW; $C_o$ = 40 µF; $L_o$ = 200 mH.

Current Measurement Input Circuit (terminals 13 and 14, respectively 23 and 24):
in type of protection intrinsic sapfety Ex ia IIC, Ex ia IIIC or Ex ia I, only for connection to a certified intrinsically safe circuit, with the following maximum values (per circuit):
$U_i$ = 30 V, $I_i$ = 140 mA, $P_i$ = 1 W, $C_i$ = 0 nF, $L_i$ = 0 mH

# FM/CSA Installation Drawing

Non Hazardous Location

Hazardous (Classified) Location

Class I, Division 1, Group A, B, C, D
Class I, Zone 0 and Zone 1 AEx ia IIC
Class I, Division 2, Groups A, B, C, D

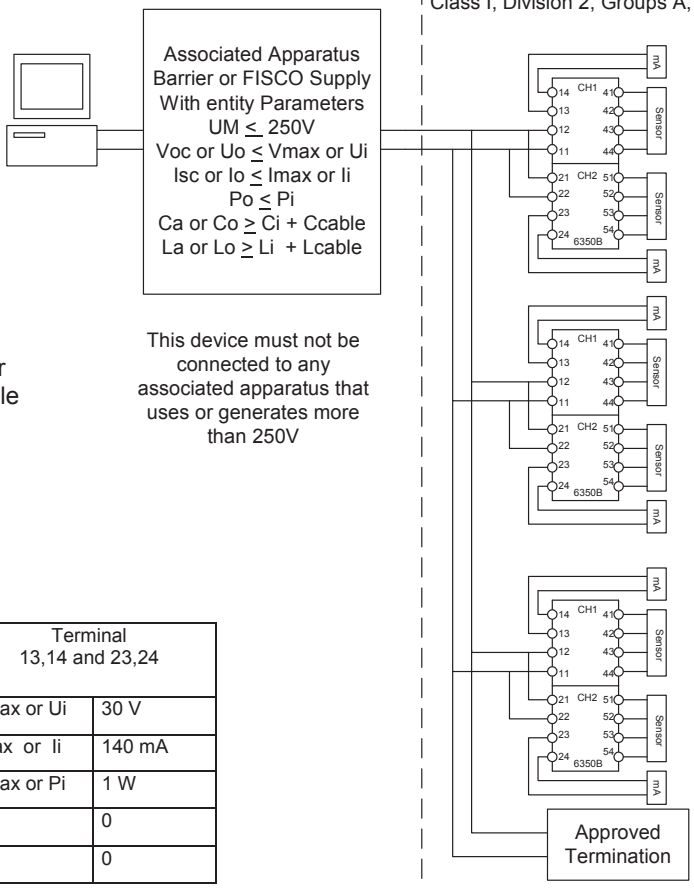


Applicable for:

6350B2a where
a = A (Single Channel) or
B (Double Channel)

All drawings are shown for Double Channel. For Single Channel installation Channel 2 (CH2) is not mounted (terminal 51-54 and 21-24)

See Installation notes.

| Terminal 41-44 and 51-54 | |
|---|---|
| Vt or Uo | 5.71 V |
| It or Io | 8.4 mA |
| Pt or Po | 12 mW |
| Ca or Co | 40 µF |
| La or Lo | 200 mH |

| Terminal 13,14 and 23,24 | |
|---|---|
| Vmax or Ui | 30 V |
| Imax or Ii | 140 mA |
| Pmax or Pi | 1 W |
| Ci | 0 |
| Li | 0 |

| Terminal 11-12 21-22 | IS, Class I, Division 1, Group A,B,C,D Class I,Zone 0 AEx ia IIC Entity,Fisco | | | | Class I, Division 2, Group A,B,C,D Class I, Zone 1 AEx ib IIC | |
|---|---|---|---|---|---|---|
| T1..T5 | Ta ≤ +60°C | Ta ≤ +60°C | Ta ≤ +60°C | Ta ≤ +60°C | Ta ≤ +60°C | Ta ≤ +60°C |
| T6 | Ta ≤ +60°C | Ta ≤ +45°C | Ta ≤ +45°C | Ta ≤ +45°C | Ta ≤ +60°C | Ta ≤ +60°C |
| Vmax or Ui | 30 V | 30V | 17.5 V | 15V | 30 V | 17.5 V |
| Imax or Ii | 120 mA | 300mA | 250 mA | any | 250 mA | any |
| Pmax or Pi | 0.84 W | 1.3 W | 2.0 W | any | 5.32 W | any |
| Ci | 2 nF | 2 nF | 2 nF | 2 nF | 2 nF | 2 nF |
| Li | 1 µH | 1 µH | 1 µH | 1 µH | 1 µH | 1 µH |

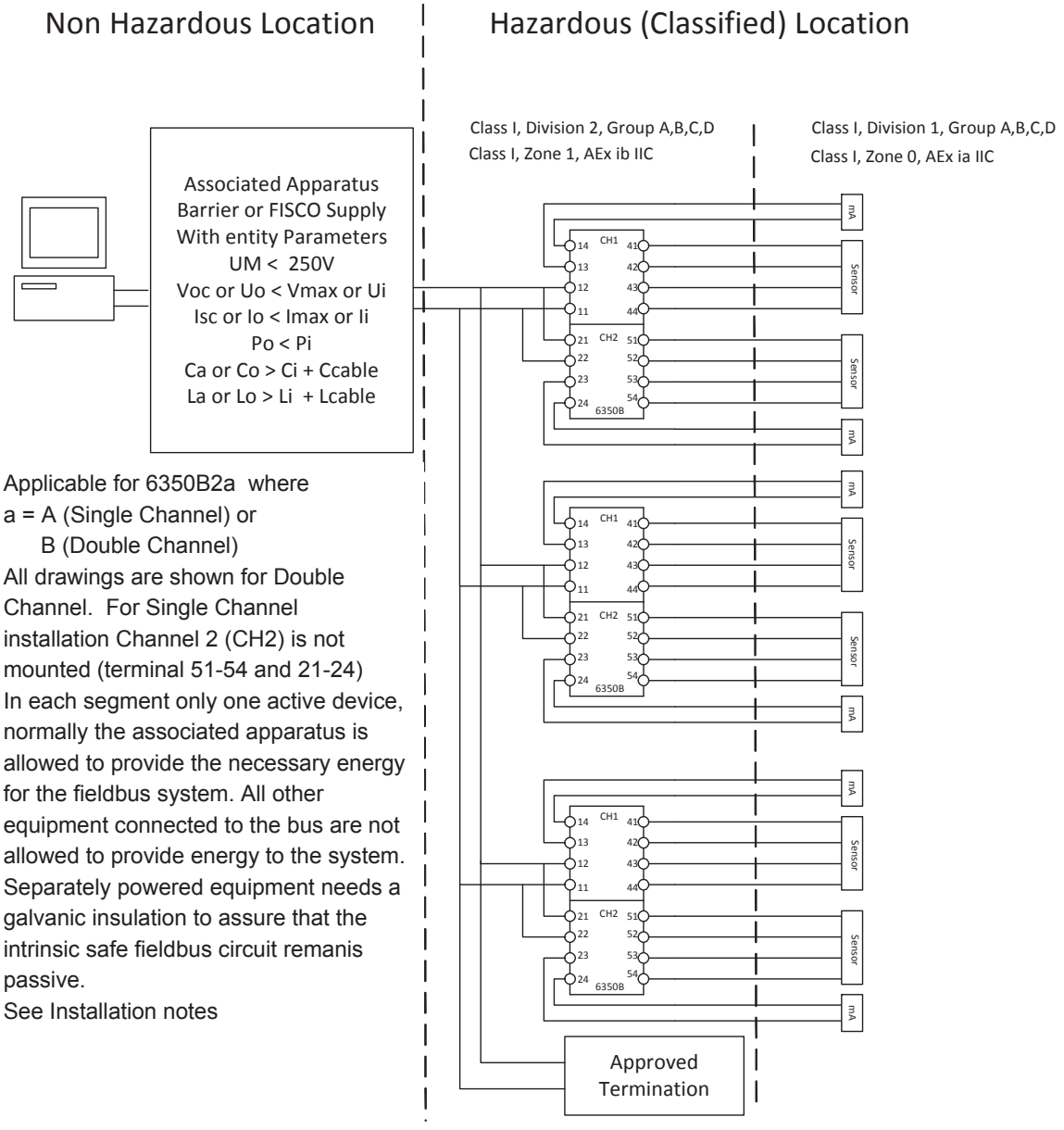


Applicable for 6350B2a where
a = A (Single Channel) or
B (Double Channel)
All drawings are shown for Double Channel. For Single Channel installation Channel 2 (CH2) is not mounted (terminal 51-54 and 21-24)
In each segment only one active device, normally the associated apparatus is allowed to provide the necessary energy for the fieldbus system. All other equipment connected to the bus are not allowed to provide energy to the system. Separately powered equipment needs a galvanic insulation to assure that the intrinsic safe fieldbus circuit remanis passive.
See Installation notes

| Terminal 13,14 and 23,24 | | Terminal 11,12 and 21,22 | |
|---|---|---|---|
| Vmax (Ui) | 30 V | 30 V | 17.5 V |
| Imax (Ii) | 140 mA | 250 mA | any |
| Pmax (Pi) | 1 W | 5.32 W | any |
| Ci | 0 | 2 nF | 2 nF |
| Li | 0 | 1 µH | 1 µH |

| Terminal 41-44 and 51-54 | |
|---|---|
| Vt or Uo | 5.71 V |
| It or Io | 8.4 mA |
| Pt or Po | 12 mW |
| Ca or Co | 40 µF |
| La or Lo | 200 mH |

## Non Hazardous Location

## Hazardous (Classified) Location

Class I, Zone 2
Class I, Division 2, Groups A, B, C, D

This device must not be connected to any associated apparatus which uses or generates more than 250VRMS

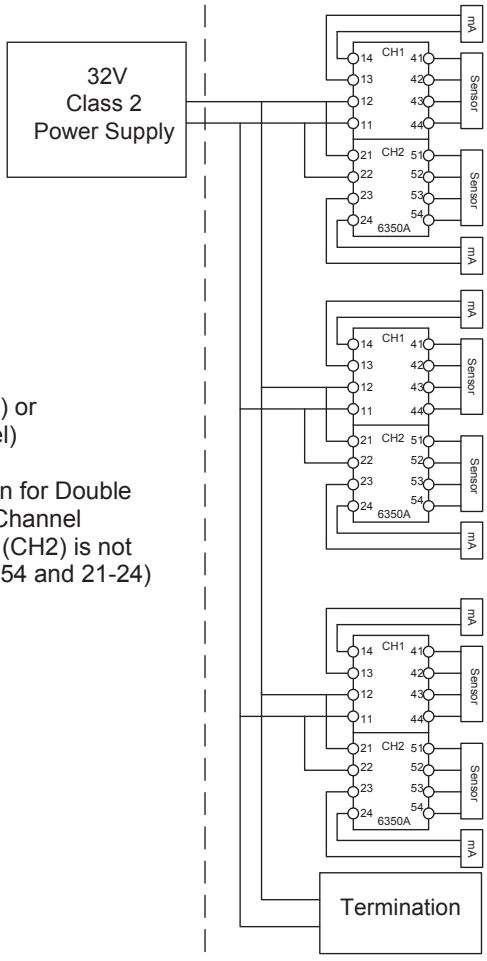


Applicable for:

6350A2a where
a = A (Single Channel) or
B (Double Channel)

All drawings are shown for Double Channel. For Single Channel installation Channel 2 (CH2) is not mounted (terminal 51-54 and 21-24)

See Installation notes.

| Terminal: 11,12 and 21,22 | Class I, Division 2, Group A,B,C,D<br>Class I, Zone2 IIC |
|---|---|
| | Ta ≤ +60°C |
| Vmax (Ui) | 32 V |

## Installation notes:

This drawing applies to models 6350A2a and 6350B2a
Where: a = A (Single Channel) or B (Double Channel)

All drawings are shown as Double Channel.
For Single Channel installation Channel 2 (CH2) is not mounted (terminal 51-54 and 21-24)

For installation in the US the 6350 must be installed according to National Electrical Code (ANSI-NFPA 70).
For installation in Canada the transmitter must be installed in a suitable enclosure to meet installation codes stipulated in the Canadian Electrical Code (CEC).
For installation in Canada different intrinsically safe circuits need to be separated as outlined in the Canadian Electrical Code (CEC)

### The entity concept

Equipment that is FM / CSA -approved for intrinsic safety may be connected to barriers based on the ENTITY CONCEPT. This concept permits interconnection of approved transmitters, meters and other devices in combinations which have not been specifically examined by FM / CSA, provided that the agency's criteria are met. The combination is intrinsically safe, if the entity concept is acceptable to the authority having jurisdiction over the installation.
The entity concept criteria are as follows:
The intrinsically safe devices, other than barriers, must not be a source of power.
The maximum voltage Ui($V_{MAX}$) and current Ii($I_{MAX}$), and maximum power Pi(Pmax), which the device can receive and remain intrinsically safe, must be equal to or greater than the voltage (Uo or $V_{OC}$ or $V_t$) and current (Io or $I_{SC}$ or $I_t$) and the power Po which can be delivered by the barrier.
The sum of the maximum unprotected capacitance ($C_i$) for each intrinsically device and the interconnecting wiring must be less than the capacitance ($C_a$) which can be safely connected to the barrier.
The sum of the maximum unprotected inductance ($L_i$) for each intrinsically device and the interconnecting wiring must be less than the inductance ($L_a$) which can be safely connected to the barrier.
The entity parameters Uo,$V_{OC}$ or $V_t$ and Io,$I_{SC}$ or $I_t$, and $C_a$ and $L_a$ for barriers are provided by the barrier manufacturer.

**FISCO rules**
The FISCO Concept allows the interconnection of intrinsically safe apparatus to associated apparatus not specifically examined in such combination. The criterion for such interconnection is that the voltage (Vmax), the current (Imax) and the power (Pi) which intrinsically safe apparatus can receive and remain intrinsically safe, considering faults, must be equal or greater than the voltage (Uo, Voc, Vt), the current (Io, Isc, It,) and the power (Po) which can be provided by the associated apparatus (supply unit). In addition, the maximum unprotected residual capacitance (Ci) and inductance (Li) of each apparatus (other than the terminators) connected to the Fieldbus must be less than or equal to 5 nF and 10 μH respectively.

In each I.S. Fieldbus segment only one active source, normally the associated apparatus, is allowed to provide the necessary power for the Fieldbus system. The allowed voltage (Uo, Voc, Vt) of the associated apparatus used to supply the bus must be limited to the range of 14V d.c. to 24V d.c. All other equipment connected to the bus cable has to be passive, meaning that the apparatus is not allowed to provide energy to the system, except to a leakage current of 50 μA for each

connected device. Separately powered equipment needs a galvanic isolation to insure that the intrinsically safe Fieldbus circuit remains passive.

The cable used to interconnect the devices needs to comply with the following parameters:

Loop resistance R': 15 ...150 Ω/KM
Inductance per unit length L': 0.4…1mH/km
Capacitance per unit length C': 80 ...200 nF/km
C' = C' line/line + 0.5 C' line/screen, if both lines are floating
or
C'= C' line/line + C' line/screen, if the screen is connected to one line
Length of spur Cable: max. 30m
Length of trunk cable: max. 1Km
Length of splice: max. 1m

Terminators
At each end of the trunk cable an approved line terminator with the following parameters is suitable:
R = 90 ...100 Ω
C = 0 ...2.2 μF.

System evaluation
The number of passive devices like transmitters, actuators, connected to a single bus segment is not limited due to I.S. reasons. Furthermore, if the above rules are respected, the inductance and capacitance of the cable need not to be considered and will not impair the intrinsic safety of the installation.

The sensor circuit is not infallibly galvanic isolated from the Fieldbus input circuit. However, the galvanic isolation between the circuits is capable of withstanding a test voltage of 500Vac during 1 minute.

**Installation Notes For FISCO and Entity Concepts:**

1. The Intrinsic Safety Entity concept allows the interconnection of FM / CSA Approved Intrinsically safe devices (Div 1 or Zone 0 or Zone1) and non.incendive apparatus (Div 2 or Zone 2) ,with entity parameters not specifically examined in combination as a system when:
   Uo or Voc or Vt ≤ Vmax, Io or Isc or It ≤ Imax, Po ≤ Pi.
   Ca or Co ≥ ΣCi + ΣCcable, La or Lo ≥ ΣLi + ΣLcable, Po ≤ Pi.
2. The Intrinsic Safety FISCO concept allows the interconnection of FM / CSA Approved Intrinsically safe devices with FISCO parameters not specifically examined in combination as a system when:

   Uo or Voc or Vt ≤ Vmax, Io or Isc or It ≤ Imax, Po ≤ Pi.
3. Dust-tight conduit seals must be used when installed in Class II and Class III environments.
4. Control equipment connected to the Associated Apparatus must not use or generate more than 250 Vrms or Vdc.
5. Installation should be in accordance with ANSI/ISA RP12.6 (except chapter 5 for FISCO Installations) “Installation of Intrinsically Safe Systems for Hazardous (Classified) Locations” and the National Electrical Code® (ANSI/NFPA 70) Sections 504 and 505.
6. The configuration of associated Apparatus must be Factory Mutual Research or CSA Approved under the associated concept.
7. Associated Apparatus manufacturer’s installation drawing must be followed when installing this equipment.

8. The 6350 Series are Approved for Class I, Zone 0, applications. If connecting AEx[ib] associated Apparatus or AEx ib I.S. Apparatus to the 6350 the I.S. circuit is only suitable for Class I, Zone 1, or Class I, Zone 2, and is not suitable for Class I, Zone 0 or Class I, Division 1, Hazardous (Classified) Locations.".
9. No revision to drawing without prior FM / CSA Approval.
10. Simple Apparatus is defined as a device that neither generates nor stores more than 1.2V, 0.1A 20uJ or 25mW.
11. The termination must be NRTL approved, and the resistor must be infallible.
12. **Warning**:
    For applications in Div2 or Zone 2 (Classified Locations) Explosion hazard: Except for field circuits, do not disconnect the apparatus unless the area is known to be non hazardous.
13. **Warning:**
    Substitution of Components May Impair Safety.

# Document history

The following list provides notes concerning revisions of this document.

| Rev. ID | Date | Notes |
|---|---|---|
| 104 | 15/48 | IECEx approval added |

# We are near you, *all over the world*

**Our trusted red boxes are supported wherever you are**

All our devices are backed by expert service and a 5-year warranty. With each product you purchase, you receive personal technical support and guidance, day-to-day delivery, repair without charge within the warranty period and easily accessible documentation.

We are headquartered in Denmark, and have offices and authorized partners the world over. We are a local business with a global reach. This means that we are always nearby and know your local markets well.
We are committed to your satisfaction and provide PERFORMANCE MADE SMARTER all around the world.

For more information on our warranty program, or to meet with a sales representative in your region, visit prelectronics.com.

# Benefit today from
# *PERFORMANCE MADE SMARTER*

PR electronics is the leading technology company specialized in making industrial process control safer, more reliable and more efficient. Since 1974, we have been dedicated to perfecting our core competence of innovating high precision technology with low power consumption. This dedication continues to set new standards for products communicating, monitoring and connecting our customers' process measurement points to their process control systems.

Our innovative, patented technologies are derived from our extensive R&D facilities and from having a great understanding of our customers' needs and processes. We are guided by principles of simplicity, focus, courage and excellence, enabling some of the world's greatest companies to achieve PERFORMANCE MADE SMARTER.